PARTS CATALOG
CATALOGUE PIECES
ERSATZTEILKATALOG

527 Combine
527 Moissonneuse-Batteuse
527 Hydrostatische Mähdrescher

Don 7-4061

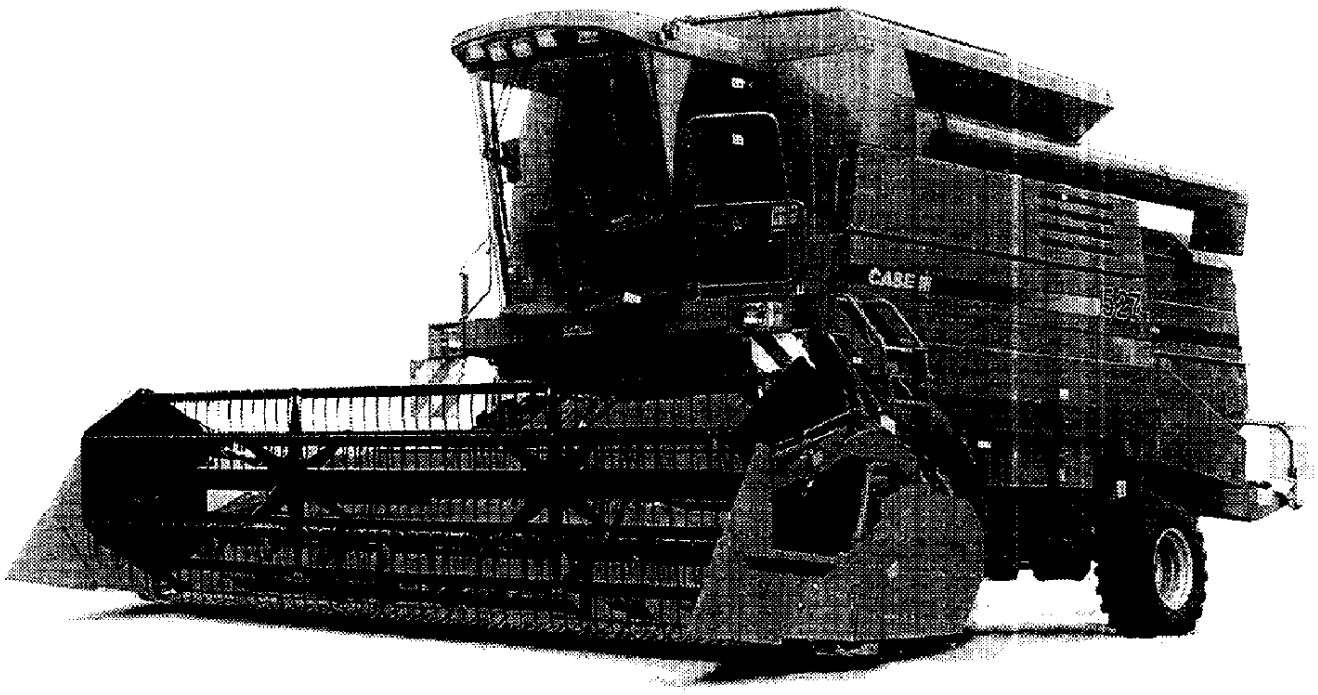

DR99E067

Copyright © 1999 Case Corporation. All rights reserved.
CASE and CASE IH are registered trademarks of Case Corporation

Ref	Part Number	Qty	Description

527 CASE IH COMBINE (1/98-12/98)

005 TROUGH, FINGER BAR, KNIFE - HLS

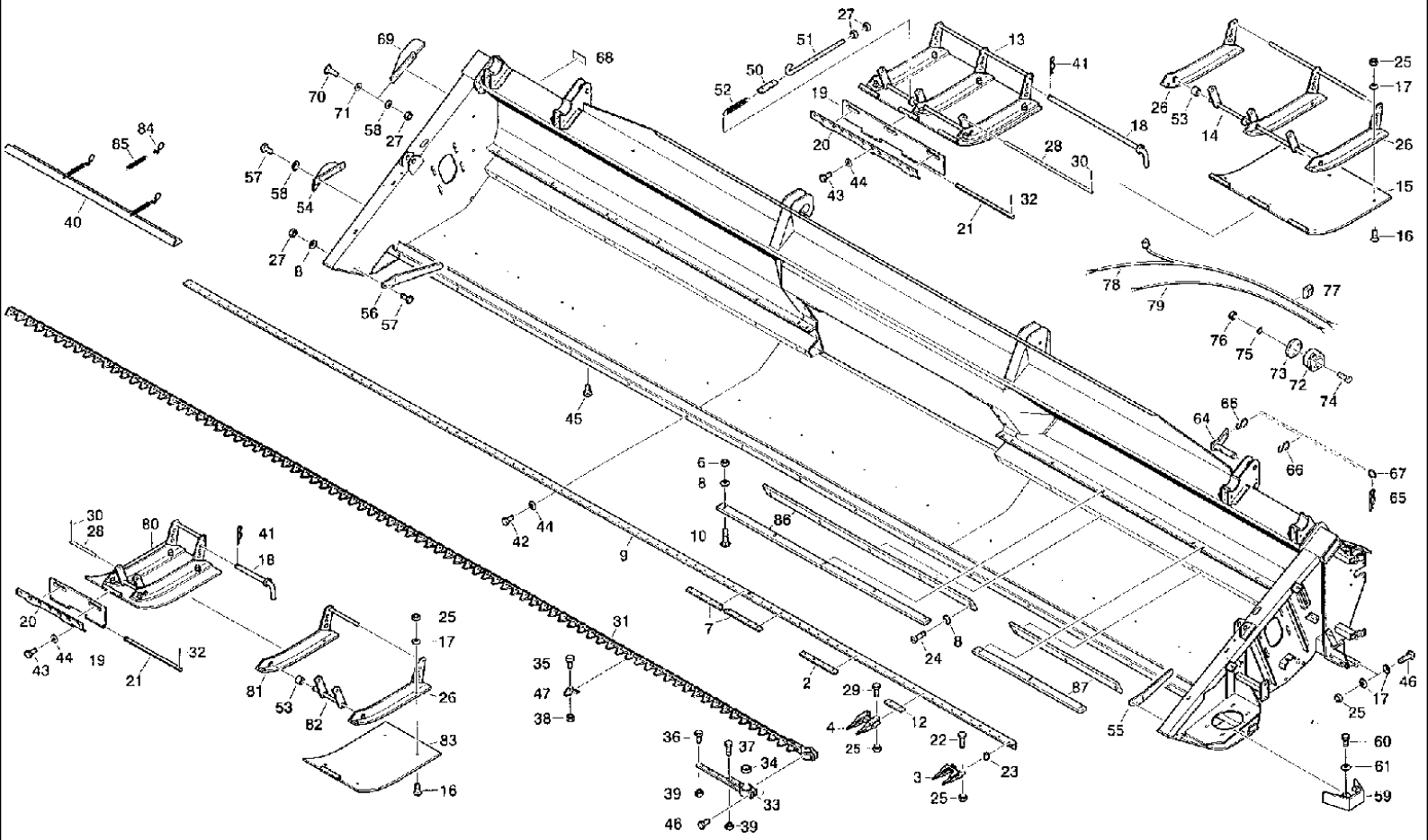

527 CASE IH COMBINE (1/98-12/98)

005 TROUGH, FINGER BAR, KNIFE - HLS

Ref	Part Number	Qty	Description
3	060531001	1	FINGER, double guide
4	4260714174	35	FINGER, double guide, 5.4m, 12
4	4260714174	40	FINGER, double guide, 6.0m, 12
4	4260714174	43	FINGER, double guide, 6.6m, 12
6	006213830	14	NUT, hex, 5.4m, M8-8
6	006213830	16	NUT, hex, 6.0m, M8-8
6	006213830	16	NUT, hex, 6.6m, M8-8
8	9999853117	28	PLATE, LOCKING, WASHER, 5.4m, VSF M8
8	9999853117	36	PLATE, LOCKING, WASHER, 6.0m, VSF M8
8	9999853117	36	PLATE, LOCKING, WASHER, 6.6m, VSF M8
9	061063071	1	ANGLE BAR, 5.4m
9	061063088	1	ANGLE BAR, 6.0m
9	061063096	1	ANGLE BAR, 6.6m
10	9945926163	14	SCREW, round head, 5.4m, M 8 x 20-8.8
10	9945926163	16	SCREW, round head, 6.0m, M 8 x 20-8.8
10	9945926163	16	SCREW, round head, 6.6m, M 8 x 20-8.8
11	4260714190	17	PLATE, LEDGER, finger, 5.4m, 4 holes
11	4260714190	20	PLATE, LEDGER, finger, 6.0m, 4 holes
11	4260714190	21	PLATE, LEDGER, finger, 6.6m, 4 holes
12	4260714205	1	PLATE, LEDGER, finger, 5.4m, 2 holes
12	4260714205	1	PLATE, LEDGER, finger, 6.6m, 2 holes
13	061035517	2	SOLE, slide, 6.0m
13	061035517	2	SOLE, slide, 6.6m
14	061035533	2	FRAME, 6.0m
14	061035533	2	FRAME, 6.6m
15	061035541	2	SOLE, 6.0m
15	061035541	2	SOLE, 6.6m
16	9943935037	16	SCREW, countersunk, 5.4m, M10 x 25 -4.6
16	9943935037	12	SCREW, countersunk, 6.0m, M10 x 25 -4.6
16	9943935037	12	SCREW, countersunk, 6.6m, M10 x 25 -4.6
17	9999853166	20	PLATE, LOCKING, WASHER, 5.4m, VSF B10
17	9999853166	14	PLATE, LOCKING, WASHER, 6.0m, VSF B10
17	9999853166	14	PLATE, LOCKING, WASHER, 6.6m, VSF B10
18	061036438	8	PIN, SPLIT (COTTER), BOLT handle, 5.4m
18	061036438	6	PIN, SPLIT (COTTER), BOLT handle, 6.0m
18	061036438	6	PIN, SPLIT (COTTER), BOLT handle, 6.6m
19	061046681	4	PLATE, transition, 5.4m
19	061036413	2	PLATE, transition, 6.0m
19	061036413	2	PLATE, transition, 6.6m
20	061046673	4	RAIL, 5.4m
20	061046673	2	RAIL, 6.0m
20	061046673	2	RAIL, 6.6m
21	061046665	4	PIN, LARGE, BOLT, 5.4m
21	061036390	2	PIN, LARGE, BOLT, 6.0m
21	061036390	2	PIN, LARGE, BOLT, 6.6m

527 CASE IH COMBINE (1/98-12/98)

005 TROUGH, FINGER BAR, KNIFE - HLS

Ref	Part Number	Qty	Description
24	060528754	14	SCREW, fillister-head, 5.4m, M 10 x 20-10.9
24	060528754	16	SCREW, fillister-head, 6.0m, M 10 x 20-10.9
24	060528754	16	SCREW, fillister-head, 6.6m, M 10 x 20-10.9
25	006213935	72	NUT, hex, 5.4m, M10-8
25	006213935	95	NUT, hex, 6.0m, M10-8
25	006213935	101	NUT, hex, 6.6m, M10-8
26	061035525	4	PROFILE,
27	006213830	6	NUT, hex, 5.4m, M8 -8
27	006213830	10	NUT, hex, 6.0m, M8 -8
27	006213830	10	NUT, hex, 6.6m, M8 -8
28	9949864852	8	PIN, LARGE, bolt, 5.4m, B20 h11 x 50
28	9949864852	6	PIN, LARGE, bolt, 6.0m, B20 h11 x 50
28	9949864852	6	PIN, LARGE, bolt, 6.6m, B20 h11 x 50
29	9933931180	72	SCREW, hex, 5.4m, M10 x 35 -8.8
29	9933931180	82	SCREW, hex, 6.0m, M10 x 35 -8.8
29	9933931180	88	SCREW, hex, 6.6m, M10 x 35 -8.8
30	9963950274	16	PIN, SPLIT (COTTER), 5.4m, 5 x 32
30	9963950274	12	PIN, SPLIT (COTTER), 6.0m, 5 x 32
30	9963950274	12	PIN, SPLIT (COTTER), 6.6m, 5 x 32
31	061046640	2	KNIFE, mower, 5.4m
31	061036784	2	CUTTING BLADE, mower knife, 6.0m
31	061036792	2	CUTTING BLADE, mower knife, 6.6m
32	006402361	8	PIN, SPLIT (COTTER), 5.4m, 4 x 25
32	006402361	4	PIN, SPLIT (COTTER), 6.0m, 4 x 25
32	006402361	4	PIN, SPLIT (COTTER), 6.6m, 4 x 25
33	060518141	1	HEAD, KNIFE,
34	003794047	1	PIN, ROLL, COLLAR clamp
35	4260716416	137	SCREW, toothed, 5.4m
35	4260716416	157	SCREW, toothed, 6.0m
35	4260716416	169	SCREW, toothed, 6.6m
36	003794071	6	SCREW, hex, M 6 x 18-10.9
37	003794088	3	SCREW, hex, M 6 x 28-10.9
38	003794096	137	NUT, hex, 5.4m, VM 6-8
38	003794096	157	NUT, hex, 6.0m, VM 6-8
38	003794096	169	NUT, hex, 6.6m, VM 6-8
39	4260716408	9	NUT,
40	4264714250	4	PLATE, LEDGER, finger guard, 5.4m
40	4264714250	5	PLATE, LEDGER, finger guard, 6.0m
40	4264714250	5	PLATE, LEDGER, finger guard, 6.6m
41	060508814	8	SPLIT PIN/SAFETY PIN, hair cotter, 5.4m
41	060508814	6	SPLIT PIN/SAFETY PIN, hair cotter, 6.0m
41	060508814	6	SPLIT PIN/SAFETY PIN, hair cotter, 6.6m
42	006346666	9	SCREW, hex, 5.4m, M12 x 30 -8.8
42	006346666	11	SCREW, hex, 6.0m, M12 x 30 -8.8
42	006346666	14	SCREW, hex, 6.6m, M12 x 30 -8.8

527 CASE IH COMBINE (1/98-12/98)

005 TROUGH, FINGER BAR, KNIFE - HLS

Ref	Part Number	Qty	Description
43	9933932028	8	SCREW, hex, 5.4m, M 12 x 35 -8.8
43	9933932028	8	SCREW, hex, 6.0m, M 12 x 35 -8.8
43	9933932028	7	SCREW, hex, 6.6m, M 12 x 35 -8.8
44	9960964555	17	WASHER, 5.4m, 13
44	9960964555	19	WASHER, 6.0m, 13
44	9960964555	21	WASHER, 6.6m, 13
45	9933960312	6	SCREW, hex, 6.0m, M12 x 16 -8.8
45	9933960312	6	SCREW, hex, 6.6m, M12 x 16 -8.8
46	9933931308	2	SCREW, hex, M10 x 45 -8.8
47	4260714246	73	KNIFE SECTION, 5.4m
47	4260714246	83	KNIFE SECTION, 6.0m
47	4260714246	89	KNIFE SECTION, 6.6m
50	061036405	2	BRAKE, ROD connecting, 6.0m
50	061036405	2	BRAKE, ROD connecting, 6.6m
51	060514041	2	SCREW, eyelet, 6.0m, BM 8 x 160
51	060514041	2	SCREW, eyelet, 6.6m
52	9974882732	2	SPRING, TENSION, 6.0m
52	9974882732	2	SPRING, TENSION, 6.6m
53	061035558	1	PLUG, spacer piece, 5.4m
53	061035558	2	PLUG, spacer piece, 6.0m
53	061035558	2	PLUG, spacer piece, 6.6m
54	061035172	1	PROTECTOR, right side
55	4268704784	1	DEFLECTOR, left side
56	4268704792	1	DEFLECTOR, right side
57	9933930001	10	SCREW, hex, 5.4m, M 8 x 20-8.8
57	9933930001	6	SCREW, hex, 6.0m, M 8 x 20-8.8
57	9933930001	6	SCREW, hex, 6.6m, M 8 x 20-8.8
58	9999853158	4	PLATE, LOCKING, VSF B8
59	061041820	59	HEAD, KNIFE,
60	006344037	2	SCREW, M10 x 25 -8.8
61	9999853094	2	PLATE, LOCKING, VSF- M10
62	061042307	1	SCRAPER, 5.4m, right side
62	061041396	1	SCRAPER, 6.0m, right side
62	061041396	1	SCRAPER, 6.6m, right side
63	061046712	1	SCRAPER, 5.4m, right side
63	061041468	1	SCRAPER, 6.0m, right side
63	061041402	1	SCRAPER, 6.6m, right side
64	061032627	2	PIN, SPLIT (COTTER), spring
65	060512634	2	SPLIT PIN/SAFETY PIN, 6.3
66	06800220	4	HOOK,
67	4240054440	2	RING, key, A20
68	060508381	2	PRODUCT GRAPHIC, Nr.11
69	061043896	1	GUARD, PIPE
70	9933929173	2	SCREW, hex, M 8 x 25 -8.8
71	9961921673	2	WASHER, R9

005 TROUGH, FINGER BAR, KNIFE - HLS

Ref	Part Number	Qty	Description
72	007067048	3	SOCKET/RECEPTACLE, PLUG
73	4140751514	3	PLUG, PLATE socket
74	9936939312	9	SCREW, cheese-head, M 5 x 35 -5.8
75	9961919902	9	WASHER, SPRING, B5
76	006213478	9	NUT, hex, M5 -8
77	9019059944	21	CLIP, CABLE, ACC38-A-20
78	061046995	1	CABLE, right side
79	061046987	1	CABLE, left side
80	061046552	4	SOLE, slide, 5.4m
81	061046560	4	FRAME, 5.4m
82	061046585	4	LINKAGE, 5.4m
83	061046608	4	SOLE, 5.4m
84	4260715397	8	HOOK, 5.4m
84	4260715397	10	HOOK, 6.0m
84	4260715397	10	HOOK, 6.6m
85	9974881635	8	SPRING, TENSION, 5.4m, A1, 4 x 10 x 25 AA1
85	9974881635	10	SPRING, TENSION, 6.0m, A1, 4 x 10 x 25 AA1
85	9974881635	10	SPRING, TENSION, 6.6m, A1, 4 x 10 x 25 AA1
86	061049610	4	SCRAPER, 5.4m
86	061049610	4	SCRAPER, 6.6m
87	31282954	4	SCRAPER, 6.0m
87	31282954	4	SCRAPER, 6.6m
87	061049643	4	SCRAPER, 6.0m
87	061049627	4	SCRAPER, 6.6m

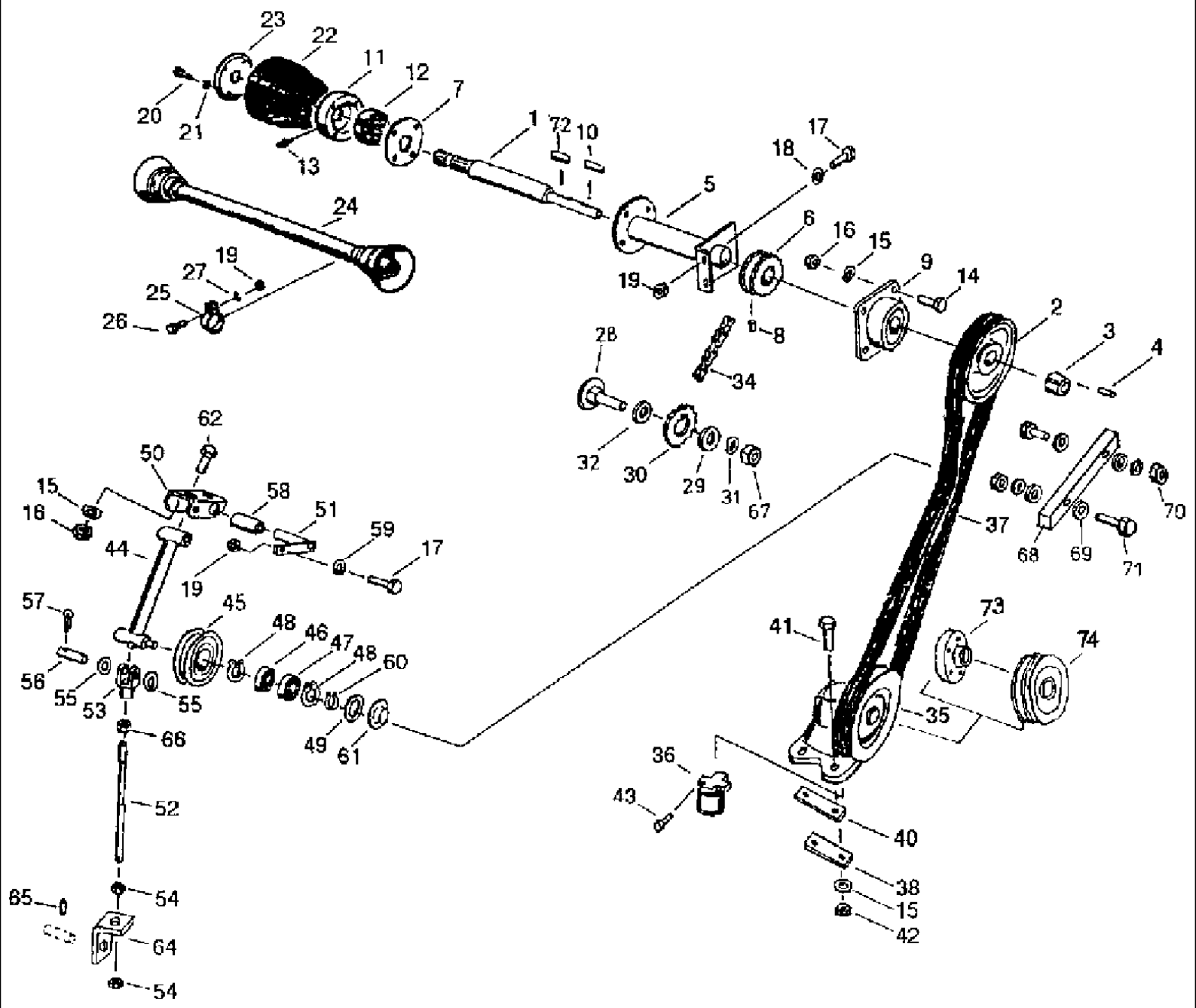
23
22
11
12
7
1
72
10
20
21
13
24
19
27
25
26
18
17
5
6
16
15
9
14
19
8
2
3
4
28
34
32
30
29
31
67
62
50
15
16
58
51
59
17
44
19
57
45
48
46
47
48
60
56
55
53
55
49
61
66
52
65
54
64
54
36
43
41
73
74
35
40
38
15
42
37
70
68
69
71

527 CASE IH COMBINE (1/98-12/98)

008 KNIFE DRIVE - HLS

Ref	Part Number	Qty	Description
1	061046800	1	SHAFT, 5.4m
1	061036124	1	SHAFT, 6.0m
1	061036028	1	SHAFT, 6.6m
2	061062874	1	PULLEY, v-belt
3	060530861	1	RING, holding bushing, TSB 2517/40
4	060518391	2	PIN, threaded, 1/2"
5	061046817	1	GUARD, shaft, 5.4m
5	061036140	1	GUARD, shaft, 6.0m
5	061036044	1	GUARD, shaft, 6.6m
6	061061527	1	DRIVE SPROCKET, double
7	061036093	1	WASHER,
8	9701373700	1	PIN, threaded, M8 x 16-45H
9	060513998	1	CARRIER, BEARING, flange, FSW 40
10	060514000	2	KEY, BUCKET TOOTHRT, feather, A12 x 8 x70
11	4264714347	1	BEARING,
12	9902889503	1	BEARING, self-alinging ball, 1307
13	003617056	1	NIPPLE, LUBE, AM 8 x 1
14	9933932108	4	SCREW, hex, M12 x 40-8.8
15	9999853174	10	PLATE, LOCKING, WASHER, VSF B12
16	006214140	7	NUT, hex, M12-8
17	9933929715	3	SCREW, hex, M8 x 18-8.8
18	9999853158	2	PLATE, LOCKING, WASHER, VSF B8
19	006213830	4	NUT, hex, M8-8
20	9933930887	8	SCREW, hex, M10 x 16-8.8
21	9961911085	8	WASHER, LOCK, RING spring, B10
22	060508822	1	GUARD,
23	4264714371	1	REINFORCEMENT,
24	060504810	1	COUPLING, Cardan shaft
25	4264714468	1	CLAMP,
26	006340781	1	SCREW, hex, M18 x 16-8.8
27	9961910976	1	SPRING, ring, B8
28	061061568	1	SCREW, BOLT coach
29	006511140	1	WASHER, A17
30	060527657	1	DRIVE SPROCKET, RIM thoothed
31	060516365	1	WASHER, LOCK, spring, A16
32	061061551	1	WASHER,
34	006806925	1	CHAIN (AGRICULTURE), roller, 12B 1 x 98 E
35	061060831	1	DRIVE, ANGLE, transmission
35	061060848	1	DRIVE, ANGLE, transmission
36	060510905	1	BEARING, ke
37	061036454	1	V-BELT, composite
38	4264714556	2	BLOCK, SHIM
40	060184554	3	BLOCK, SHIM
41	9932976954	4	SCREW, hex, M12 x 65-10.9
42	9950896310	4	NUT, hex, M12-10

527 CASE IH COMBINE (1/98-12/98)

008 KNIFE DRIVE - HLS

Ref	Part Number	Qty	Description
43	060154934	2	SCREW, M10 x 35 -10.9
44	061036487	1	LEVER, ROCKER,
45	4221607780	1	ROLLER, SHIFTER, PULLEY
46	9902890400	1	BEARING, grooved ball, 6204
47	9902890642	1	BEARING, grooved ball, 6204 RS
48	9964917770	2	CIRCLIP, 47 x 1.6
49	4110085640	1	SEAL WASHER, 25.5 x 46, 5 x 0.2
50	061036550	1	CRADLE, BRACKET bearing
51	061036567	1	PIN, PIVOT, BOLT bearing
52	061036606	1	SPINDLE,
53	003799107	1	CRADLE, fork head, G16 x 64
54	9950896841	2	NUT, hex, M16 - 8
55	9960922353	2	WASHER, A17
56	9949863972	1	PIN, LARGE, BOLT, B16 x 50 x 38
57	9963950145	2	PIN, SPLIT (COTTER), 4 x 28
58	060514121	2	HALF BUSH, journal, 6FM-2528-21
59	9999853117	1	PLATE, LOCKING, WASHER, VSF M8
60	9964917168	1	NUT, RING snap, 20 x 1.5
61	9904868931	1	COVER, 47
62	006346666	2	SCREW, hex, M12 x 30-8.8
64	061036382	1	ANGLE, bent strap
65	9967942262	1	SPLIT PIN/SAFETY PIN, roll, 5 x 28
66	006214060	1	NUT, hex, M16 x 1.5
67	006214534	1	NUT, hex, M16-8
68	061061543	1	GUIDE, rail
69	006510285	6	WASHER, A10.5
70	060512080	2	NUT, hex, M10-8
71	060527448	2	SCREW, hex, M10 x 65-8.8
72	060518367	1	KEY, BUCKET TOOTHRT, feather, A 12 x 8 x 90
73	060528922	1	FLANGE,
74	060528930	1	PULLEY, V-BELT

010 AUGER - HLS

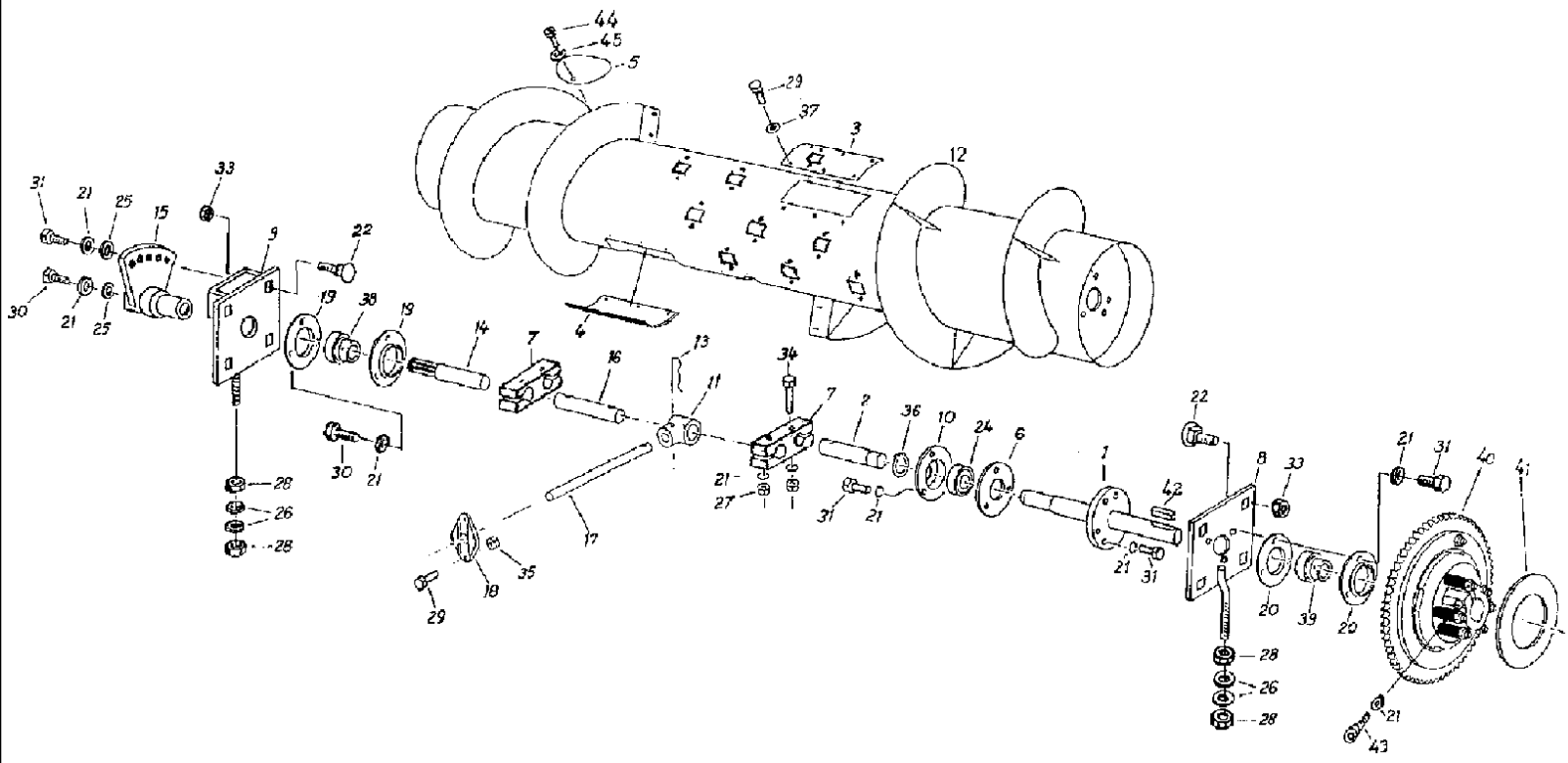

527 CASE IH COMBINE (1/98-12/98)

010 AUGER - HLS

Ref	Part Number	Qty	Description
1	061060261	1	SHAFT, DRIVE,
2	061060470	1	PIN, LARGE, BOLT
3	31283682	1	COVER,
4	31283690	1	COVER,
5	061060438	1	COVER,
6	061060446	1	FLANGE,
7	31283096	2	CLAMP BRACKET, piece
8	061060366	1	BEARING, left side
9	061060390	1	BEARING, right side
10	061060454	1	HOUSING, BEARING,
11	061060501	15	HUB, bearing
12	31282577	1	WORM, AUGER surface, 5.4m
12	31283498	1	STEERING SHAFT, AUGER surface, 6.0m
12	31283545	1	STEERING SHAFT, AUGER surface, 6.6m
13	061060487	15	PIN, LINCH, BOLT locking
14	31283504	1	STEERING SHAFT, 5.4m
14	31283498	1	STEERING SHAFT, 6.0m
14	31283545	1	STEERING SHAFT, 6.6m
15	061060333	1	LEVER, adjusting
16	061060300	1	SHAFT, tine
17	31282987	15	FINGER, tine
18	061060518	15	GUIDE, tine
19	060527407	6	HOUSING, plate, RBY 206
20	060527423	2	HOUSING, plate, RBY 207
21	9961911093	32	WASHER, LOCK, RING spring, A10
22	060527472	8	SCREW, flat-round-head, M12 x 30- 8.8
24	9902890482	1	BEARING, grooved ball, 6206 -2RS
25	9964962486	2	WASHER, A10.5
26	9965962364	4	WASHER, 14 x 32 x 5
27	006213935	8	NUT, hex, M10 -8
28	006214140	4	NUT, hex, M12 -8
29	006338385	38	SCREW, hex, M6 x 16 -8.8
30	9933929065	13	SCREW, hex, M10 x 20 -8.8
31	006344037	10	SCREW, hex, M10 x 25 -8.8
33	060527431	8	NUT, hex, M12 -8
34	060527448	4	SCREW, hex, M10 x 65 -8.8
35	060527480	25	NUT, hex, M6 -8
36	9964917215	1	CIRCLIP, 30 x 1.5
37	060150770	14	PLATE, LOCKING, WASHER, VSF B6
38	060527392	3	BEARING, YEL 206
39	060527415	1	BEARING, YEN 207
40	060527640	1	FLANGE, friction coupling
41	060528787	2	FACING, LINING clutch, FRK70 194, 5 x 122 x 5
42	97031090	1	KEY, BUCKET TOOTHRT, feather, A10 x 8 x 70
43	006283353	1	SCREW, cylinder head, M10 x 45 -8.8

012 REEL - HLS

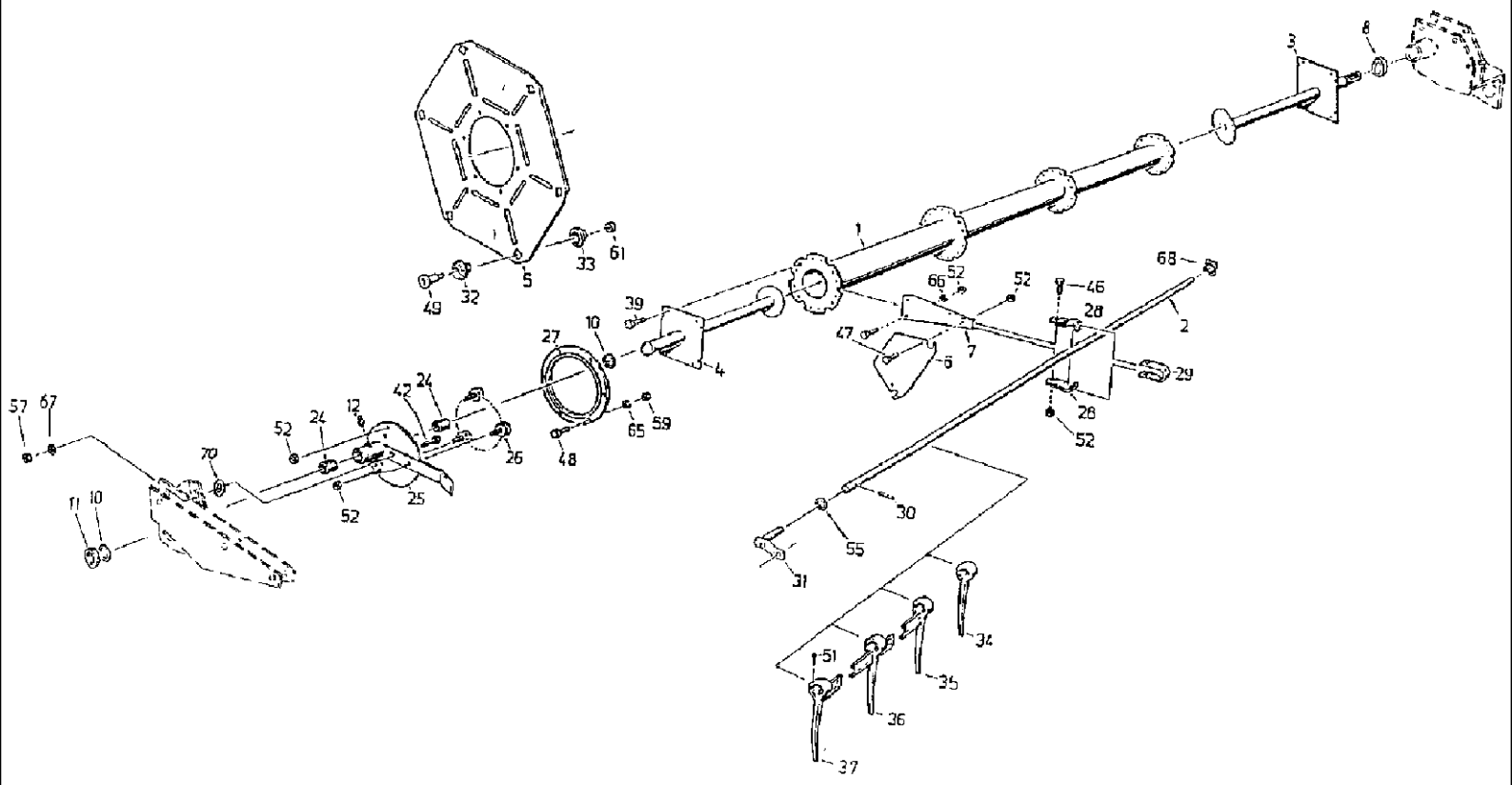
1
2
3
4
5
6
7
8
10
11
12
24
25
26
27
28
29
30
31
32
33
34
35
36
37
39
42
46
47
48
49
51
52
55
57
59
61
65
66
67
68
70

527 CASE IH COMBINE (1/98-12/98)

012 REEL - HLS

Ref	Part Number	Qty	Description
1	003780958	1	SHAFT, interm, 5.4m
1	060503770	1	SHAFT, interm, 6.0m
1	060503787	1	SHAFT, interm, 6.6m
2	003780982	6	SHAFT, FINGER holder, 5.4m
2	060503801	6	SHAFT, FINGER holder, 6.0m
2	060503818	6	SHAFT, FINGER holder, 6.6m
3	060518012	1	SHAFT, 5.4m
3	060518020	1	SHAFT, 6.0m
3	060518020	1	SHAFT, 6.6m
4	003798733	1	SHAFT, 5.4m
4	060507075	1	SHAFT, 6.0m
4	060507075	1	SHAFT, 6.6m
5	060515991	1	BEARING, end shield
6	060516002	6	BEARING, end shield
7	003798700	24	ARM, reel
8	061041322	1	SPACER,
10	003798686	2	WASHER,
11	003798678	1	RING, LOCKING, adjusting
12	003617056	1	NIPPLE, LUBE, AM 8 x 1
24	003798581	2	BEARING LINER,
25	060502302	1	SUPPORT, frame
26	060502310	3	SUPPORT, roller
27	003798557	1	ECCENTRIC, RING driving
28	003791390	48	BEARING (HALF), ARM reel
29	003791382	24	BEARING, plate
30	060502327	12	SPLIT PIN/SAFETY PIN,
31	003798540	6	ARM, crank
32	060502335	6	BEARING, TUBE spacer
33	060502343	6	NUT, BEARING excentr.
34	003798524	12	FINGER, plastic
35	003798516	18	FINGER, FINGER plastic, right side
36	003791366	234	FINGER, TINE plastic, 5.0m
36	003791366	276	FINGER, TINE plastic, 6.0m
36	003791366	300	FINGER, TINE plastic, 6.4m
37	003798508	18	FINGER, FINGER plastic, left side
39	9933931123	8	SCREW, hex, M10 x 30 -8.8
42	9945635836	1	SCREW, round-head, M12 x 35 -8.8
46	006344736	24	SCREW, hex, M10 x 50 -8.8
47	006344037	46	SCREW, hex, M10 x 25 -8.8
48	9933930001	6	SCREW, hex, M8 x 20 -8.8
49	060502351	6	PIN, PIVOT, BOLT bearing b
51	003791374	294	SCREW, fillister-head, 5.0m
51	003791374	324	SCREW, fillister-head, 6.0m
51	003791374	348	SCREW, fillister-head, 6.4m
52	9950897818	81	NUT, hex, VM 10-8

012 REEL - HLS

Ref	Part Number	Qty	Description
55	770000802	12	SHIM, precision , 36 x 45 x 2
57	006214140	1	NUT, hex, M12-8
59	006213830	6	NUT, hex, M8-8
61	9954897654	6	NUT, hex, VM 12 -8
65	9961910976	6	SPRING, WASHER lock, B 8
66	9961911085	48	WASHER, LOCK, SPRING, B10
67	9999853174	1	PLATE, LOCKING, WASHER, VSF B12
68	060507050	36	RING, THRUST, plastic
70	006502871	1	WASHER, n.B.,14

014 REEL SUPPORT - HLS

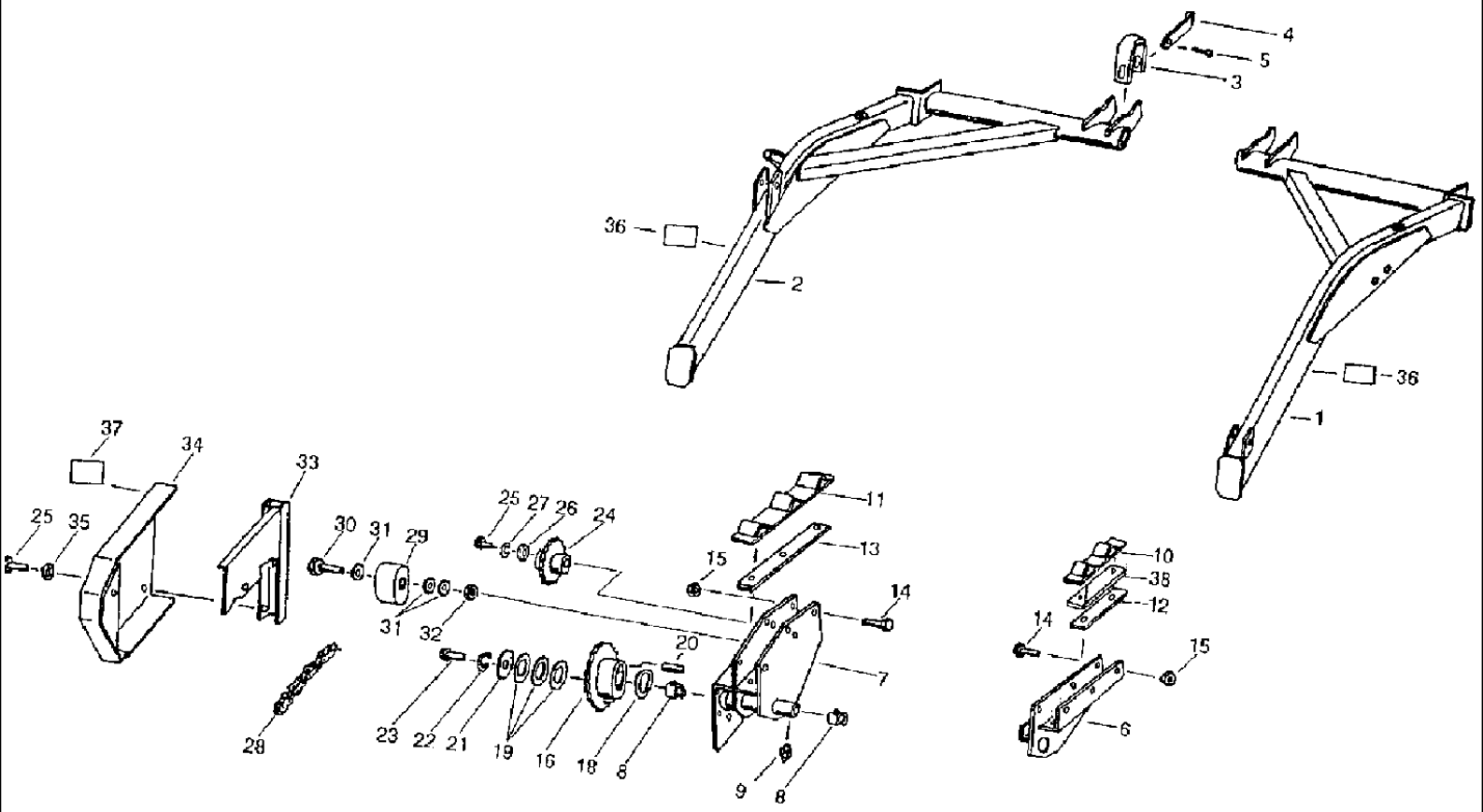

527 CASE IH COMBINE (1/98-12/98)

014 REEL SUPPORT - HLS

Ref	Part Number	Qty	Description
1	31283135	1	ARM, reel, left side
2	31283143	1	ARM, reel, right side
3	4223632915	4	BOW,
4	4223632892	4	KEY,
5	9963950194	4	PIN, SPLIT (COTTER), 5 x 25
6	061035806	1	GUIDE, reel, left side
7	061037020	1	GUIDE, right side
8	4241021230	2	BUSHING, sliding
9	003617056	1	NIPPLE, LUBE, AM 8 x 1
10	061035830	1	PLATE, left side
11	061035871	1	PLATE, right side
12	061035896	2	SLAT, STRIP support, 5.4m, left side
12	061035896	1	SLAT, STRIP support, 6.0m, left side
12	061035896	1	SLAT, STRIP support, 6.6m, left side
13	061035902	2	PLATE, BACKING, STRIP support, 5.4m, right side
13	061035902	1	PLATE, BACKING, STRIP support, 6.0m, right side
13	061035902	1	PLATE, BACKING, STRIP support, 6.6m, right side
14	9933977851	5	SCREW, hex, M10 x 78 -8.8
15	006269000	5	NUT, hex, M10 - SW16 -8
16	061043902	1	PINION, WHEEL chain, 35z
18	003799734	2	SHIM, WASHER precision, 42 x 52 x 1
19	003791542	6	SHIM, WASHER precision, 35 x 45 x 1
20	9965956487	1	KEY, BUCKET TOOTHRT, FITTING, A10 x 8 x 63
21	9965962202	1	WASHER, 11 x 50 x 6
22	9961911093	1	WASHER, LOCK, RING spring, A10
23	9933929065	1	SCREW, hex, M10 x 20 -8.8
24	061036985	1	SPROCKET ASSY., WHEEL chain, 15z
25	006340781	7	SCREW, hex, M8 x 16 -8.8
26	9965964928	1	WASHER, 9 x 32 x 4
27	9961911237	1	WASHER, LOCK, RING spring, A8
28	060520587	1	CHAIN (AGRICULTURE), roller, 10B - 1 x 66 E
29	4221625725	1	TENSIONER, BLOCK fastening
30	9932959385	1	SCREW, hex, M12 x 80 -8.8
31	9960922128	4	WASHER, 14
32	006267177	1	NUT, hex, M12 - SW18-8
33	061037094	1	SUPPORT, MOUNT
34	061037053	1	PROTECTOR, REEL
35	9999853158	7	PLATE, LOCKING, WASHER, 5.4m, VSF B8
35	9999853158	6	PLATE, LOCKING, WASHER, 6.0m, VSF B8
35	9999853158	6	PLATE, LOCKING, WASHER, 6.6m, VSF B8
36	060510351	2	DECAL, Nr.20
37	060506652	1	DECAL, Nr.21
38	061043910	AR	BLOCK, n.B.

015 REEL, HYDR. SYSTEM - HLS

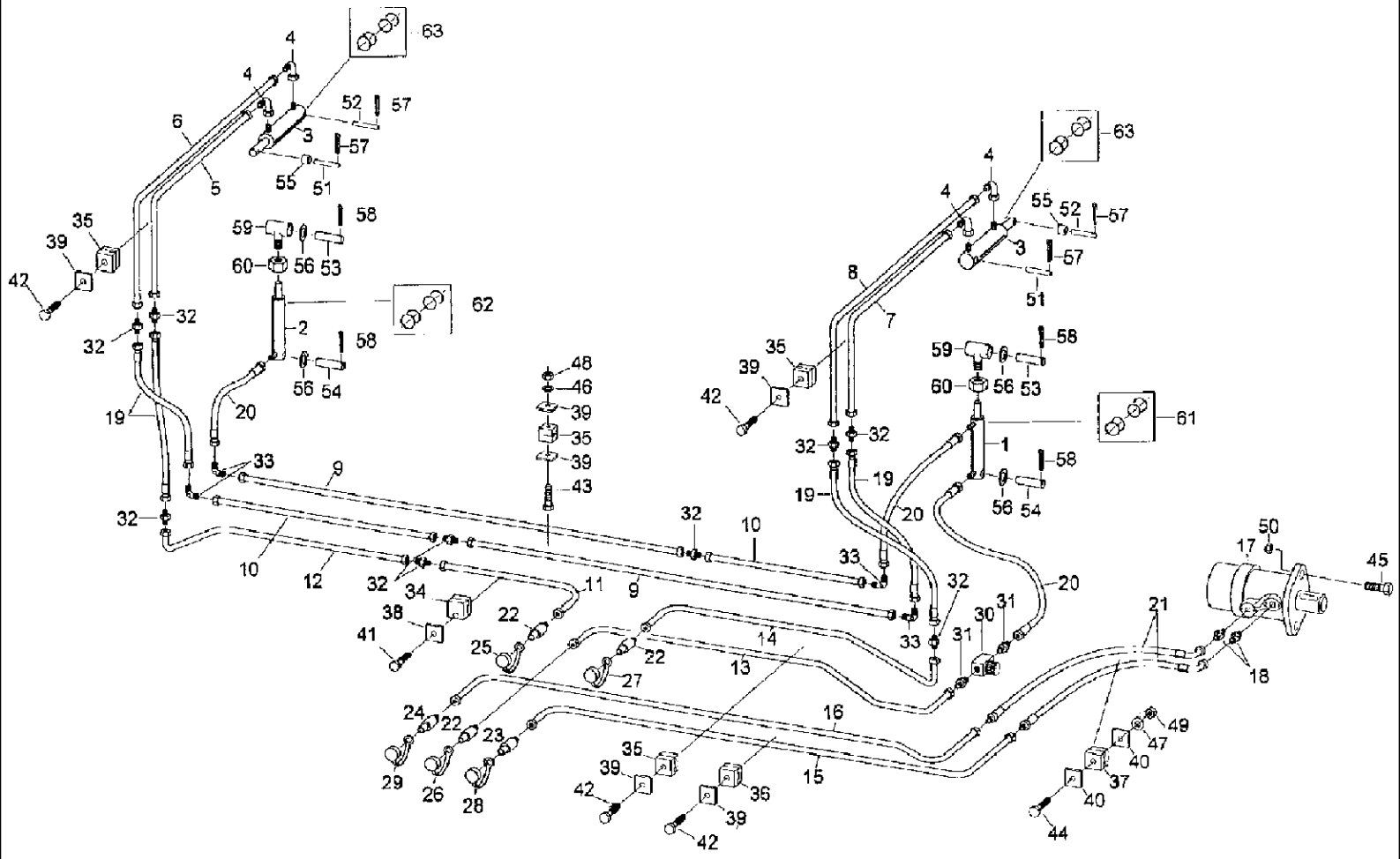

527 CASE IH COMBINE (1/98-12/98)

015 REEL, HYDR. SYSTEM - HLS

Ref	Part Number	Qty	Description
1	4264715854	1	CYLINDER ASSY., DZ 35/25 -250
2	4264715846	1	CYLINDER ASSY., EZ 24.5 -250
3	021362755	2	CYLINDER ASSY., DZ 32/20 - 220
4	003793970	5	ELBOW, FITTING w-type, EW 8-L
5	061060784	1	TUBE ASSY., GS1-1
6	061041611	1	PIPE, GS2
7	061041628	1	PIPE, GS3
8	061060792	1	PIPE, GS4-1
9	061041740	2	PIPE, GS5
10	061041757	2	PIPE, 6.6m, GS6
10	061042018	2	TUBE ASSY., 6.0m, GS13
10	061046913	2	TUBE, HYD, 5.4m, GS40
11	061041652	1	TUBE ASSY., GS7
12	061041660	1	PIPE, 6.6m, GS8
12	061041958	1	PIPE, 6.0m, GS14
12	061046921	1	TUBE, HYD, 5.4m, GS41
13	061041677	1	PIPE, 6.6m, GS9
13	061041966	1	TUBE ASSY., 6.0m, GS15
13	061046938	1	TUBE, HYD, 5.4m, GS42
14	061041685	1	PIPE, 6.6m, GS10
14	061041974	1	TUBE ASSY., 6.0m, GS16
14	061046946	1	TUBE, HYD, 5.4m, GS43
15	061041693	1	PIPE, 6.6m, GS11
15	061041982	1	TUBE ASSY., 6.0m, GS17
15	061046954	1	TUBE, HYD, 5.4m, GS44
16	061041708	1	PIPE, 6.6m, GS12
16	061041990	1	TUBE ASSY., 6.0m, GS18
16	061046962	1	PIPE, 5.4m, GS45
17	061034532	1	MOTOR, HYDRAULIC, engine
18	003791663	2	ADAPTER, CONNECTION screwing
19	060514580	4	HOSE, PHD 206 x 400 AOL AOL
20	060514597	2	HOSE, PHD 206 x 560 AOL AOL
21	060504722	2	HOSE, PHD 210 x 400 AOL 45 HL
22	9901635767	3	FITTING, fixed half, SKFS 06 HL3
23	060514603	1	FIXING BRACKET, half, SKFS10 HL3
24	060514611	1	SUPPORT, fixed half, SKFS10 HL4
25	9901635791	1	GUARD, CAP dust, gn, SKF ZUBS 3
26	9901635775	1	GUARD, CAP dust, rt, SKF ZUBS 3
27	9901635783	1	GUARD, CAP dust, 6.0m, bl, SKF ZUBS 3
27	9901635783	1	GUARD, CAP dust, 6.6m, bl, SKF ZUBS 3
28	003799910	1	GUARD, CAP dust, 6.0m, ge, SKF ZUBS 3
28	003799910	1	GUARD, CAP dust, 6.6m, ge, SKF ZUBS 3
29	060519497	1	GUARD, CAP dust, 6.0m, ge, SKF ZUBS 4
29	060519497	1	GUARD, CAP dust, 6.6m, ge, SKF ZUBS 4
30	060514644	1	VALVE, non-return, 6.0m, EDR V6

527 CASE IH COMBINE (1/98-12/98)

015 REEL, HYDR. SYSTEM - HLS

Ref	Part Number	Qty	Description
30	060514644	1	VALVE, non-return, 6.6m, EDR V6
31	060514652	2	ADAPTER, male-en, GE 8.-L/R1/8
32	9969946801	10	UNION, G8.-L
33	9969947111	3	UNION, W8.-L
34	006646314	3	CIRCLIP, 5.4m, 108PP
34	006646314	3	CIRCLIP, 6.0m, 108PP
34	006646314	4	CIRCLIP, 6.6m, 108PP
35	006646187	12	CIRCLIP, 5.4m, 108/08PP
35	006646187	13	CIRCLIP, 6.0m, 108/08PP
35	006646187	13	CIRCLIP, 6.6m, 108/08PP
36	006646218	3	CIRCLIP, 112/12PP
37	060514732	1	CIRCLIP, 320/20 PPH
38	006646250	3	COVER, PLATE, 5.4m, DP1
38	006646250	3	COVER, PLATE, 6.0m, DP1
38	006646250	3	COVER, PLATE, 6.6m, DP1
39	006646291	20	COVER, PLATE, 5.4m, GD1D
39	006646291	22	COVER, PLATE, 6.0m, GD1D
39	006646291	22	COVER, PLATE, 6.6m, GD1D
40	060514724	2	COVER, PLATE, GD3D
41	9933929450	3	SCREW, hex, 5.4m, M6 x 30 -8.8
41	9933929450	3	SCREW, hex, 6.0m, M6 x 30 -8.8
41	9933929450	4	SCREW, hex, 6.6m, M6 x 30 -8.8
42	9933959987	10	SCREW, hex, M6 x 35 -8.8
43	9933960128	5	SCREW, hex, 5.4m, M6 x 50 -8.8
43	9933960128	6	SCREW, hex, 6.0m, M6 x 50 -8.8
43	9933960128	6	SCREW, hex, 6.6m, M6 x 50 -8.8
44	9933958190	1	SCREW, hex, M8 x 60 -8.8
45	9932932086	2	SCREW, hex, M12 x 40 -8.8
46	9999853100	5	PLATE, LOCKING, WASHER, 5.4m, VSF M6
46	9999853100	6	PLATE, LOCKING, WASHER, 6.0m, VSF M6
46	9999853100	6	PLATE, LOCKING, WASHER, 6.6m, VSF M6
47	9999853117	1	PLATE, LOCKING, WASHER, VSF M8
48	006213734	5	NUT, hex, 5.4m, M6 -8
48	006213734	6	NUT, hex, 6.0m, M6 -8
48	006213734	6	NUT, hex, 6.6m, M6 -8
49	006213830	1	NUT, hex, M8 -8
50	006267177	2	NUT, hex, M12 -8
51	003790203	2	PIN, LARGE, BOLT, B12 x 70
52	003780105	2	PIN, LARGE, BOLT, B10 x 75
54	003780074	4	PIN, LARGE, BOLT, B20 x 70
55	061041781	4	SPACER, WASHER
56	006511204	4	WASHER, A21
57	003780113	8	PIN, SPLIT (COTTER), 3.2 x 22
58	9963950274	4	PIN, SPLIT (COTTER), 5.4m, 5 x 32
58	9963950274	8	PIN, SPLIT (COTTER), 6.0m

Ref	Part Number	Qty	Description
58	9963950274	8	PIN, SPLIT (COTTER), 6.6m
59	4264715838	2	SCREW, eye
60	003781026	2	NUT, hex, M18 x 1.5
61	060511498	AR	KIT, GASKET, R, n.B., 35/25
62	060511424	AR	KIT, GASKET, R, n.B., 24.5
63	060511481	AR	KIT, GASKET, R, n.B., 32/20

017 COWLING - HLS

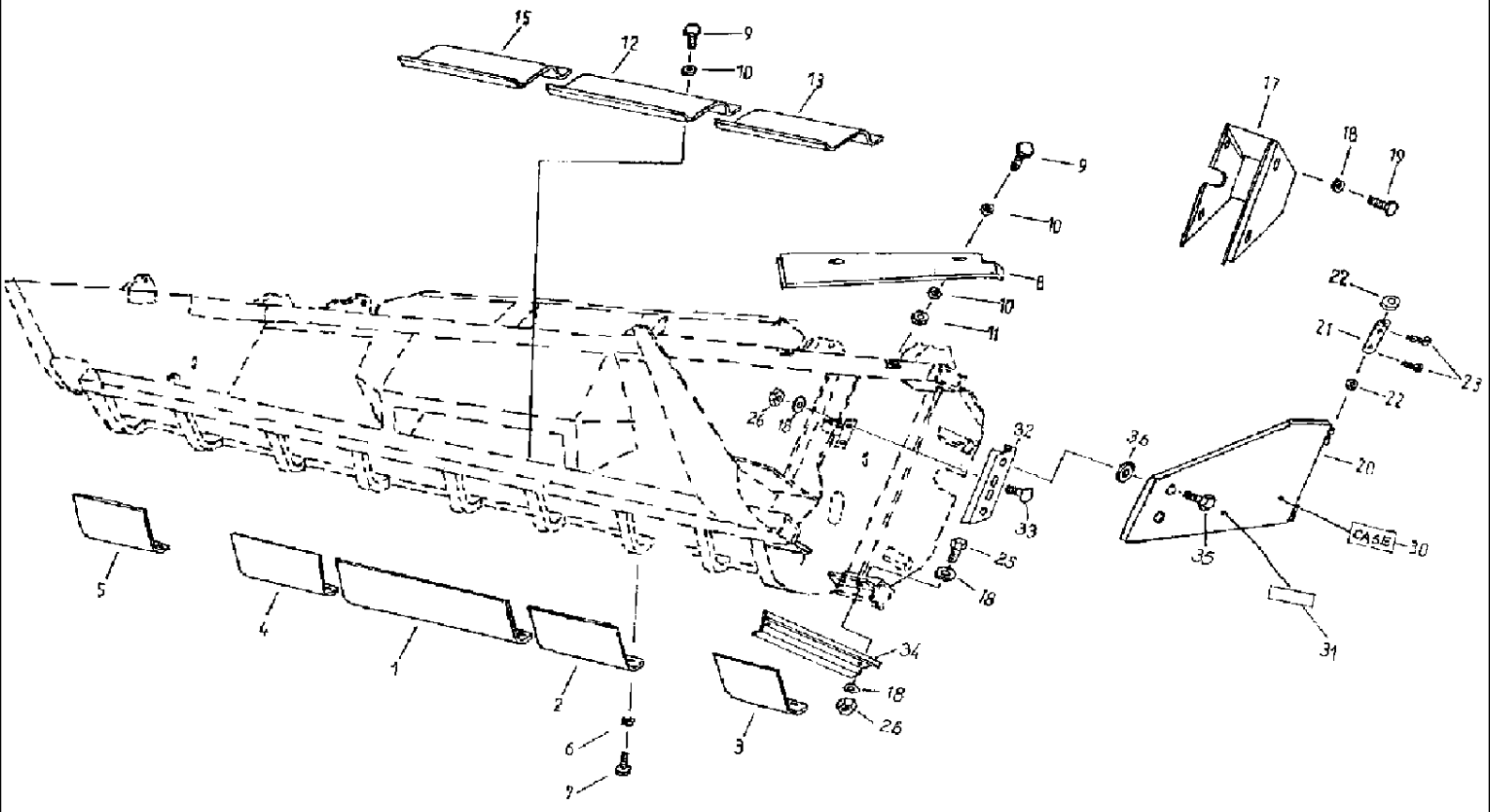

527 CASE IH COMBINE (1/98-12/98)

017 COWLING - HLS

Ref	Part Number	Qty	Description
1	061042348	1	SHEET, PLATE bottom
2	31282890	1	SHEET, PLATE bottom , 5.4m, left side
2	31282913	1	SHEET, PLATE bottom , 6.0m, left side
2	31282913	1	SHEET, PLATE bottom , 6.6m, left side
3	061042436	1	SHEET, PLATE bottom , 6.0m, left side
3	061042380	1	PLATE, STEEL, bottom, 6.6m, left side
4	061046866	1	SHEET, PLATE bottom , 5.4m, right side
4	061042444	1	SHEET, PLATE bottom , 6.0m, right side
4	061042397	1	SHEET, PLATE bottom , 6.6m, right side
5	31282905	1	SHEET, PLATE bottom , 5.4m, right side
5	31282921	1	SHEET, PLATE bottom , 6.0m, right side
5	31282921	1	SHEET, PLATE bottom , 6.6m, g
6	9933931863	9	SCREW, hex, 5.4m, M12 x 25 -8.8
6	9933931863	11	SCREW, hex, 6.0m, M12 x 25 -8.8
6	9933931863	11	SCREW, hex, 6.6m, M12 x 25 -8.8
7	9999853174	9	PLATE, LOCKING, WASHER, 5.4m, VSF B12
7	9999853174	11	PLATE, LOCKING, WASHER, 6.0m, VSF B12
7	9999853174	11	PLATE, LOCKING, WASHER, 6.6m, VSF B12
8	061036261	1	COVER, PROTECTIVE,
9	9933930001	23	SCREW, hex, 5.4m, M8 x 20 -8.8
9	9933930001	27	SCREW, hex, 6.0m, M8 x 20 -8.8
9	9933930001	27	SCREW, hex, 6.6m, M8 x 20 -8.8
10	9999853158	38	PLATE, LOCKING, WASHER, 5.4m, VSF B8
10	9999853158	78	PLATE, LOCKING, WASHER, 6.0m, VSF B8
10	9999853158	78	PLATE, LOCKING, WASHER, 6.6m, VSF B8
11	006213830	21	NUT, hex, 5.4m, M8 -8
11	006213830	27	NUT, hex, 6.0m, M8 -8
11	006213830	27	NUT, hex, 6.6m, M8 -8
12	061049426	1	SHEET, stuffing box screwing
13	061049370	1	PLATE, stuffing box screwing, 5.4m, left side
13	31283408	1	SHEET, stuffing box screwing, 6.0m, left side
13	31283231	1	SHEET, stuffing box screwing, 6.6m, left side
15	061049401	1	PLATE, stuffing box screwing, 5.4m, right side
15	31283416	1	SHEET, stuffing box screwing, 6.0m, right side
15	31283248	1	SHEET, stuffing box screwing, 6.6m, right side
17	061035750	1	PROTECTOR,
18	9999853166	12	PLATE, LOCKING, WASHER, VSF B10
19	9933929065	4	SCREW, hex, M10 x 20 -8.8
20	061049475	1	PANEL, SIDE, guide
21	007611063	2	PIN, LARGE, BOLT, B10 x 80
22	007611063	4	PIN, LARGE, DISK adjusting, 10 x 16
23	9963949762	4	PIN, SPLIT (COTTER), 3.2 x 16
25	006344037	4	SCREW, hex, M10 x 25 -8.8
26	006213935	6	NUT, hex, M10 -8
30	09168805	1	DECAL, symbol

017 COWLING - HLS

Ref	Part Number	Qty	Description
31	060506652	1	DECAL, symbol, Nr.21
32	061049506	1	CLAMP, SPECIAL, STUD
33	9945926284	2	SCREW, saucer head, M10 x 20 -8.8
34	061049555	1	PLATE, STEEL, guard
35	060515950	2	PIN, LARGE, BOLT locking, 800-8-A
36	060515967	2	DISC, arrest, 800-VH-NA

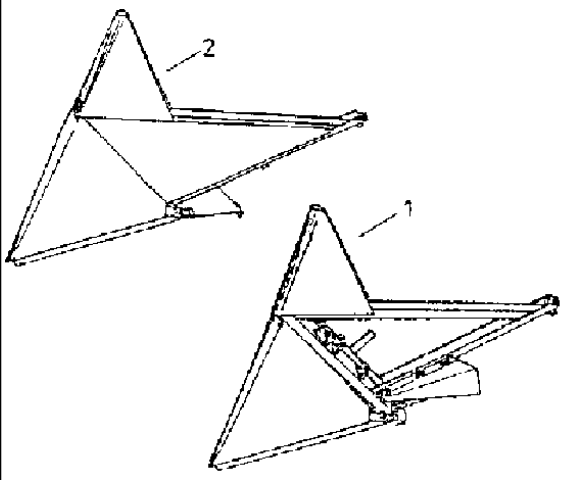
2
1

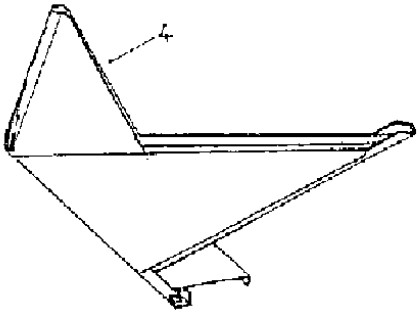
4

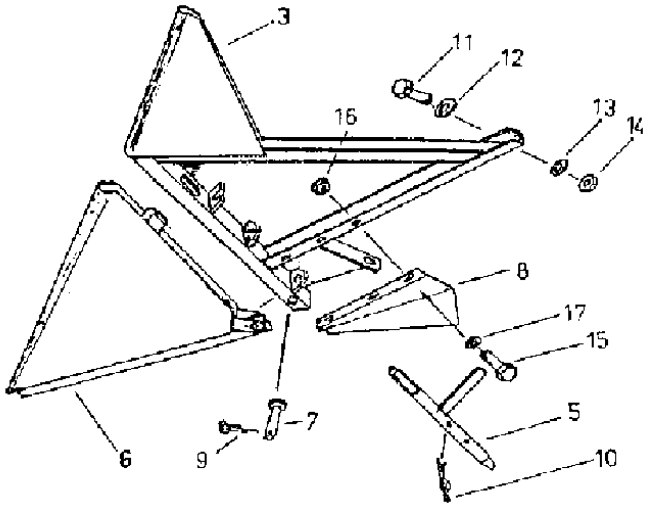
3
11
12
13
14
16
8
17
15
5
10
6
9
7

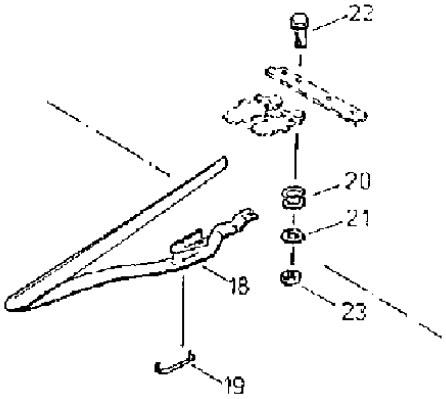
22
20
21
18
23
19

527 CASE IH COMBINE (1/98-12/98)

018 DIVIDER HEAD - HLS

Ref	Part Number	Qty	Description
1	061042838	1	POINT, HEAD divider, left side
2	061042991	1	POINT, HEAD divider, right side
3	061042846	1	DIVIDER, head, left side
4	061043002	1	DIVIDER, right side
5	061042967	2	CONTACT, PLUG
6	021183664	2	POINT,
7	4268704630	2	PIN, LARGE, BOLT
8	061043027	1	PANEL, deflector
9	006402361	2	PIN, SPLIT (COTTER), 4 x 25
10	060508814	2	SPLIT PIN/SAFETY PIN, PLUG spring, 4
11	9933932028	6	SCREW, hex, M12 x 35 -8.8
12	9965924406	6	WASHER, 14 x 40 x 8
13	9999853174	6	PLATE, LOCKING, WASHER, VSF B12
14	006214140	6	NUT, hex, M12 -8
15	9933930001	3	SCREW, hex, M8 x 20 -8.8
16	006213830	3	NUT, hex, M8-8
17	9999853158	3	PLATE, LOCKING, WASHER, VSF B8
18	4264716308	17	LIFTER, GRAIN, ear, 5.4m, AS-100
18	4264716308	16	LIFTER, GRAIN, ear, 6.0m, AS-100
18	4264716308	18	LIFTER, GRAIN, ear, 6.6m, AS-100
19	4264716324	AR	CLASP, locking, n.B.
20	4264716316	17	ROLLER, 5.4m, JD-2
20	4264716316	16	ROLLER, 6.0m, JD-2
20	4264716316	18	ROLLER, 6.6m, JD-2
21	9965921870	17	WASHER, 5.4m, 11 x 25 x 4
21	9965921870	16	WASHER, 6.0m, 11 x 25 x 4
21	9965921870	18	WASHER, 6.6m, 11 x 25 x 4
22	9933929057	17	SCREW, hex, 5.4m, M10 x 55 -8.8
22	9933929057	16	SCREW, hex, 6.0m, M10 x 55 -8.8
22	9933929057	18	SCREW, hex, 6.6m, M10 x 55 -8.8
23	006213935	17	NUT, hex, 5.4m, M10 -8
23	006213935	16	NUT, hex, 6.0m, M10 -8
23	006213935	18	NUT, hex, 6.6m, M10 -8

019 CHANNEL HOUSING

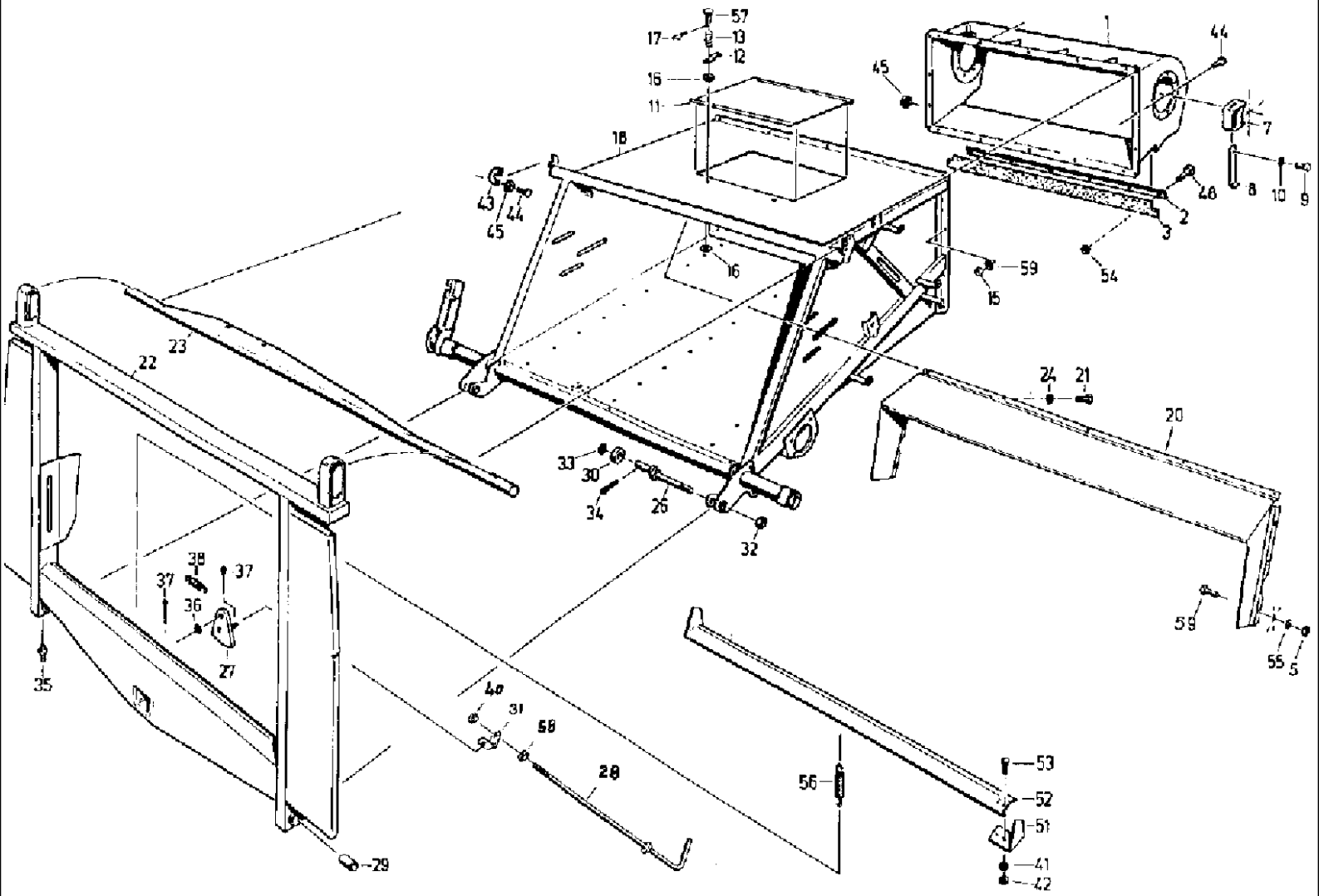

527 CASE IH COMBINE (1/98-12/98)

019 CHANNEL HOUSING

Ref	Part Number	Qty	Description
1	061033058	1	CASE, housing
2	061004535	1	SLAT, gib
3	061064216	1	JOINT, RUBBER, SEAL
5	006214776	6	NUT, hex, M8-10
7	4260701877	2	RETAINER, bracket
8	4260701885	2	HOOK,
9	006340781	2	SCREW, hex, M8 x 16,-8.8
10	9961910976	2	SPRING, WASHER lock, B8
11	4221600114	1	COVER, channel
12	4221600130	2	BLANK-OFF PLUG, LOCKING
13	9973879738	2	SPRING, COMPRESSION, A2.2 x 15 x 5.5
15	9954897654	19	NUT, hex, M12 - 8
16	9960921787	4	WASHER, A10.5
17	9963949762	2	PIN, SPLIT (COTTER), 3.2 x 16
18	061029607	1	BOTTOM, channel
20	061003405	1	COVER, sealing
21	9933929161	6	SCREW, hex, M6 x 10 -8.8
22	061064177	1	FRAME,
23	061024932	1	BEAM ASSY., BAR pendulum
24	060150770	6	PLATE, LOCKING, WASHER, VSF -B6
26	4260702580	2	ARCH, BOLT adjusting
27	4260702597	1	LATCH, PEDALS, LOCKING
28	061004881	1	ARRESTER, CATCH
29	4260702531	2	BUSHING,
30	4260702548	2	ROLLER, SHIFTER,
31	4260702556	1	ANGLE BAR,
32	060501672	2	NUT, hex, M24 x 2 -6
33	9960922931	2	WASHER, 33
34	9963950828	2	PIN, SPLIT (COTTER), 8 x 50
35	003617056	2	NIPPLE, LUBE, AM8 x 1
36	9960922353	1	WASHER, A17
37	9963950145	2	PIN, SPLIT (COTTER), 4 x 28
38	9974882740	1	SPRING, TENSION, A2.5 x 28 x 16, A1
40	9954897654	1	NUT, hex, VM12 -SW18 - 8
41	9999853158	2	PLATE, LOCKING, WASHER, VSF B8
42	006213830	2	NUT, hex, M8 -8
43	060199858	2	CLASP,
44	006346666	25	SCREW, hex, M12 x 30 -8.8
45	9999853125	6	PLATE, LOCKING, WASHER, VSF M12
48	9945926268	8	SCREW, round head, M8 x 25 - 8.8
51	4260702564	1	COVER, ANGLE sealing
52	061004873	1	SEAL, profile
53	9945926163	2	SCREW, round head M8 x 20 -8.8
54	003794537	8	NUT, hex, VM8 -8
55	9999853117	6	PLATE, LOCKING, WASHER, VSF -M8

527 CASE IH COMBINE (1/98-12/98)

019 CHANNEL HOUSING

Ref	Part Number	Qty	Description
56	9974882757	4	SPRING, TENSION, B2 x 18 x 40 Aa, 2
57	9949863072	2	PIN, LARGE, BOLT, B10h11 x 30 x 24
58	006214140	1	NUT, hex, M12 -8
59	9933930001	6	SCREW, hex, M8 x 20 -8.8

021 WEIGHT COMPENSATION

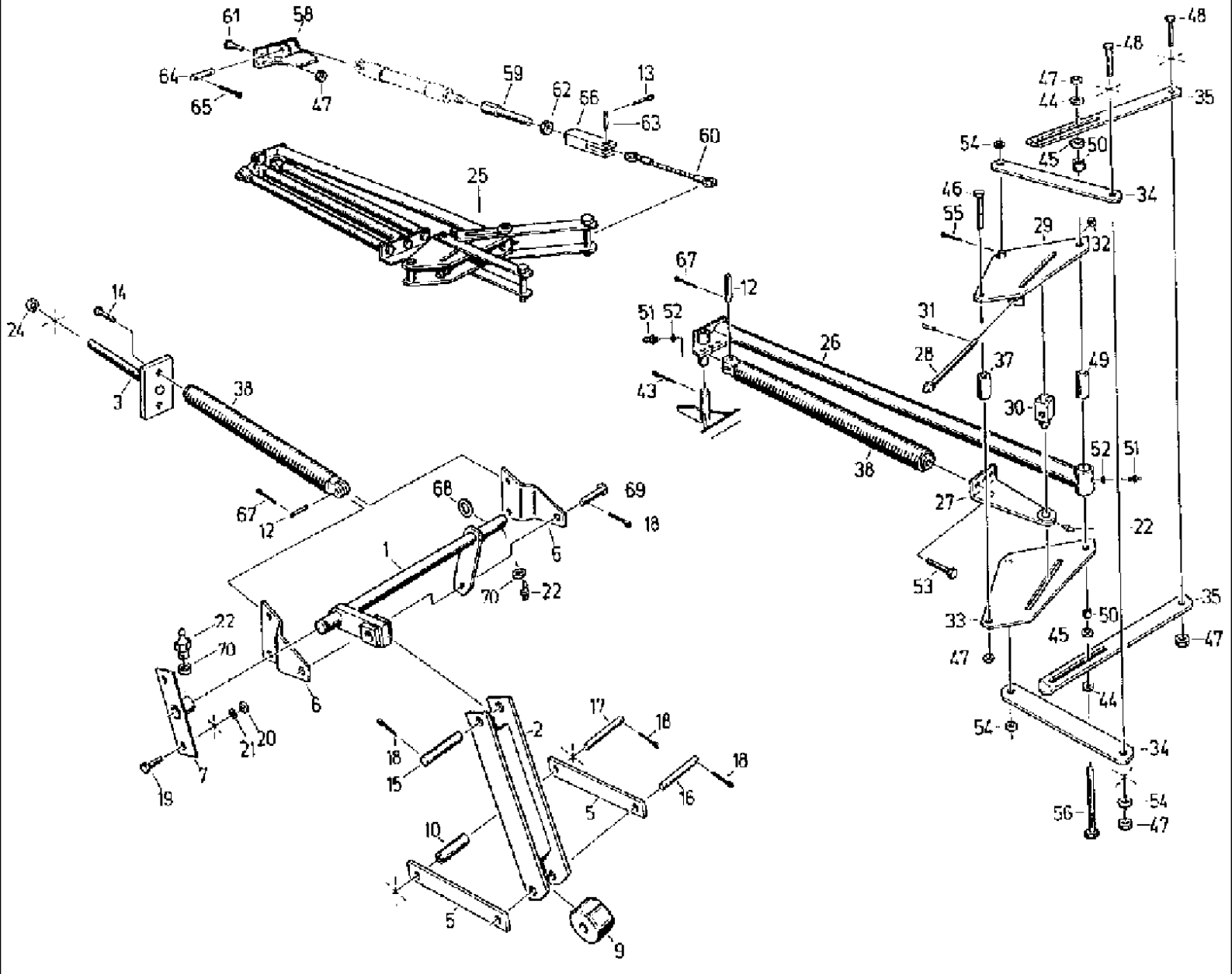

527 CASE IH COMBINE (1/98-12/98)

021 WEIGHT COMPENSATION

Ref	Part Number	Qty	Description
1	061026315	1	LEVERSHAFT,
2	4260702283	1	BRAKE, ROD connecting
3	4260702291	1	ROD, ADJUSTMENT, spindle
5	4260702314	2	LEVER, ROCKER,
6	061026331	2	SHIN, STRAP
7	061026323	1	BEARING,
9	4260702355	1	ROLLER, SHIFTER,
10	4260702363	1	SPACER,
12	003781122	5	PIN, LARGE, BOLT, B12, h11 x 50
13	006402361	2	PIN, SPLIT (COTTER), 4 x 25
14	9933932028	2	SCREW, hex, M12 x 35 -8.8
15	9949864008	1	PIN, LARGE, BOLT, B16, h11 x 60
16	9949864153	1	PIN, LARGE, BOLT, B16, h11 x 70
17	060162557	1	PIN, LARGE, BOLT, B16, h11 x 85
18	9963950032	6	PIN, SPLIT (COTTER), 4 x 32
19	9933930001	2	SCREW, hex, M8 x 20 -8.8
20	006214776	2	NUT, hex, M8 -10
21	9999853158	2	PLATE, LOCKING, WASHER, VSF -B8
22	003637285	2	NIPPLE, LUBE, AM6
24	9950896913	1	NUT, hex, M16 -10
25	061029793	1	ACCUMULATOR, spring
26	061033025	1	ROD, connecting
27	061026436	1	YOKE, LINKAGE, balance
28	061026477	1	SPINDLE,
29	060195934	1	SHIN, STRAP
30	061064064	1	SHIN, PIECE articulated
31	9967942615	1	PIN, grooved plain, 4 x 25
32	9960921988	1	WASHER, 13
33	060195967	1	SHIN, STRAP
34	060195918	2	STAY, BRACE
35	4260702451	2	STAY, BRACE
37	4260702476	1	SLEEVE,
38	4131771881	5	SPRING, TENSION,
43	9963950547	1	PIN, SPLIT (COTTER), 6.3 x 45
44	9965902235	2	WASHER, 14 x 45 x 6
45	9965964848	2	WASHER, 22 x 50 x 6
46	9932959385	1	SCREW, hex, M12 x 80 -8.8
47	9954897654	5	NUT, hex, VM12 -8
48	061026428	2	SCREW,
49	4260702468	1	SLEEVE,
50	4260702492	2	BUSHING,
51	003617056	2	NIPPLE, LUBE, AM8 x 1
52	060501100	2	WASHER, A8.4
53	060512683	3	SCREW, hex, M12 x 140 -8.8
54	9960922353	4	WASHER, A17

021 WEIGHT COMPENSATION

Ref	Part Number	Qty	Description
55	060512128	2	SPLIT PIN/SAFETY PIN, BRACE, 5 x 40
56	006303375	1	SCREW, hex, M12 x 120 -8.8
58	4260715288	1	BRACKET,
59	060129234	1	CLEVIS, fork
60	003799043	1	ROPE,
61	006346666	1	SCREW, hex, M12 x 30 -8.8
62	006222647	1	NUT, hex, M16 x 1.5 -04
63	9949863972	1	PIN, LARGE, BOLT, B16, h11 x 50 x 38
64	9949865878	1	PIN, LARGE, BOLT, B20, h11 x 65 x 48
65	9963950274	2	PIN, SPLIT (COTTER), 5 x 32
66	003799107	1	CRADLE, CLEVIS, g, 16 x 64
67	9963949795	10	PIN, SPLIT (COTTER), 3.2 x 20
68	9960922876	3	WASHER, 26
69	007634094	1	PIN, LARGE, BOLT, B16, h11 x 35 x 28
70	006510927	2	WASHER, A6.4

023 DRIVE, CHANNEL

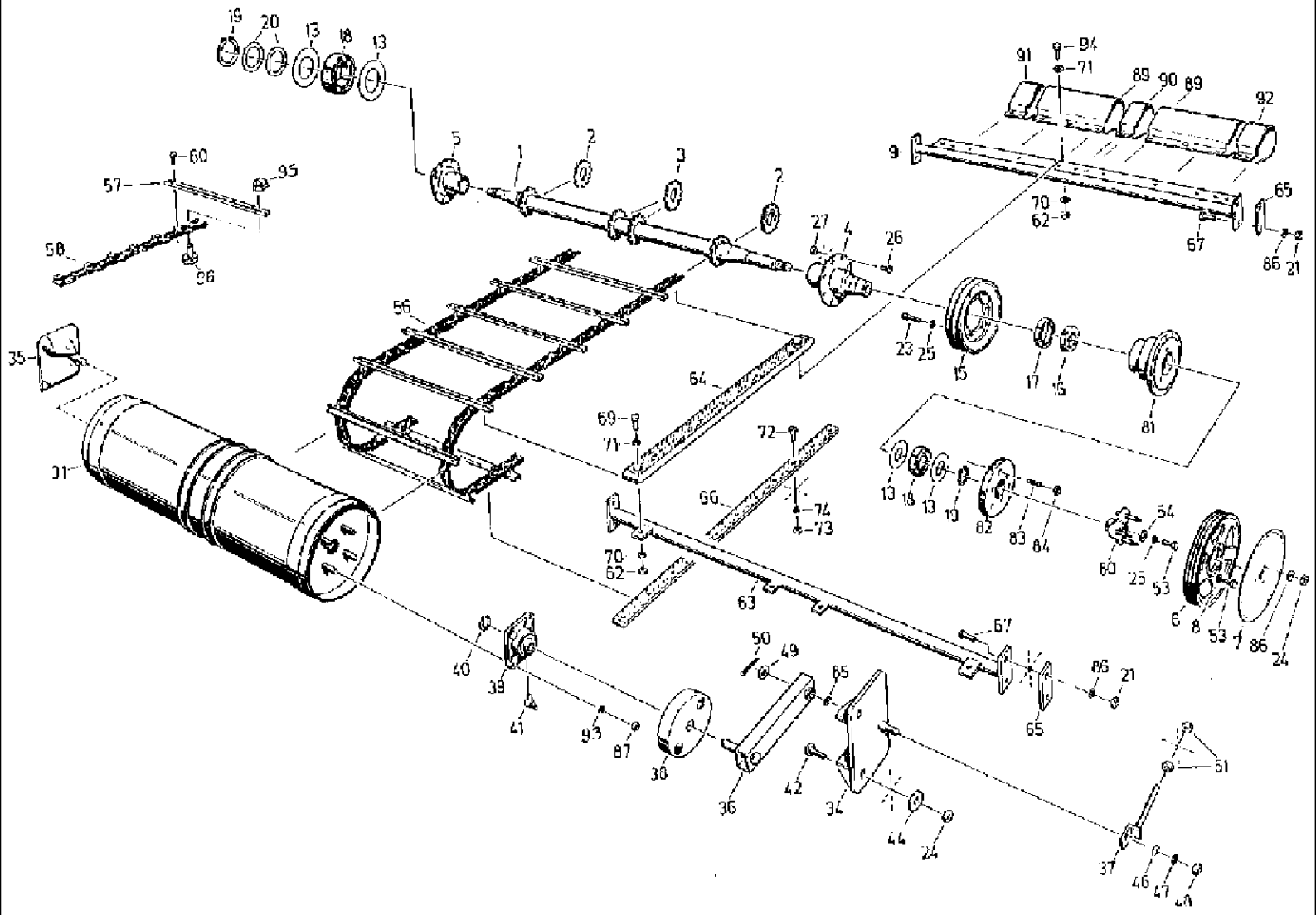

527 CASE IH COMBINE (1/98-12/98)

023 DRIVE, CHANNEL

Ref	Part Number	Qty	Description
1	061004510	1	SHAFT, DRIVE,
2	4260701908	2	SLEWING RING, RIM toothed
3	4260701916	2	SLEWING RING, RIM toothed
4	4260701924	1	BEARING, FLANGE
5	4260701932	1	BEARING, FLANGE
6	061004711	1	GROOVED PULLEY, V-BELT
7	4260707560	1	PROTECTOR,
8	9999853166	6	PLATE, LOCKING, WASHER, VSF- B10
9	061032522	1	STEM, STRUT support
13	4260701981	4	SEAL WASHER,
15	061004568	1	GROOVED PULLEY, V-BELT
16	9902892982	1	BEARING, ball, 6014RS
17	9902892990	1	BEARING, ball, 6015RS
18	9902889384	2	BEARING, self-alinging, ball, 1209
19	060501455	2	CIRCLIP, 45 x 1.75
20	9965921235	4	SHIM, presicion, 45 x 55 x 1
21	9950896247	8	NUT, hex, M10 -10
23	006282168	6	SCREW, cheese head, M10 x 30 -10.9
24	006213935	7	NUT, hex, M10 -8
25	9961911085	3	WASHER, LOCK, SPRING, B10
26	060512273	16	SCREW, countersunk, M10 x 25 -5.8
27	006269000	16	NUT, hex, M10 -8
31	061003325	1	SHAFT, guide
34	4260702074	1	PLATE, LARGE, fastening
35	4260702082	1	PLATE, LARGE, fastening
36	060033854	2	LEVER, ROCKER,
37	4260702105	2	ANGLE, BRACKET stop
38	4260702113	2	COWL, covering
39	9902888270	2	CARRIER, BEARING, FLANGE, FGE 205
40	9964917192	2	CIRCLIP, 25 x 1.2
41	9920925515	2	NIPPLE, LUBE, BM8 x 1
42	9945926307	4	SCREW, round head, M10 x 25 -8.8
44	9965921991	4	WASHER, 11 x 40 x 5
46	9965923518	2	WASHER, 18 x 32 x 4
47	9961911462	2	WASHER, LOCK, SPRING, B16
48	9950896841	2	NUT, hex, M16 -8
49	006511204	2	WASHER, A21
50	9963950274	2	PIN, SPLIT (COTTER), 5 x 32
51	006214140	4	NUT, hex, M12 -8
53	9933931123	7	SCREW, hex, M10 x 30 -8.8
54	060162315	1	DISC, C11 x 50
56	061003341	2	CONVEYOR, BAND
57	061003358	46	CONNECTING STRIP, SLATS conveyor feed
58	060034172	2	CHAIN (AGRICULTURE), roller
60	9971899526	184	RIVET, round head, 8 x 16

527 CASE IH COMBINE (1/98-12/98)

023 DRIVE, CHANNEL

Ref	Part Number	Qty	Description
62	003794537	18	NUT, hex, VM8, 8
63	061003374	1	STEM, support
64	4260702162	4	BAR, GIB supporting
65	4260702170	4	BLOCK,
66	4260702187	4	SLAT, GIB bearing
67	006344037	8	SCREW, hex, M10 x 25 -8.8
69	9933929173	8	SCREW, hex, M8 x 25 -8.8
70	9960919831	8	WASHER, 9
71	9961921673	8	WASHER, R9
72	9938927741	44	SCREW, slotted pan head, M6 x 12 -4.8
73	006213734	44	NUT, hex, M6 -8
74	006576010	44	WASHER, locking, VSF M6
80	4260711854	1	DRIVE DOG,
81	4260711846	1	CASE,
82	4260715271	1	ROPE PULLEY, SHEAVE
83	9948987043	3	STUD, BOLT, M16 x 50 -8.8
84	006267152	3	NUT, hex, M16 -8
85	4260713077	2	WASHER,
86	9999853166	11	PLATE, LOCKING, WASHER, VSF B 10
87	9950897818	8	NUT, hex, VM10 -8
88	9999853158	19	PLATE, LOCKING, washer, VSF B8
89	061032530	2	COWL, panelling
90	061032547	1	COWL, panelling
91	060196935	1	SHROUD ASSY., panelling, left side
92	060196943	1	SHROUD ASSY., panelling, right side
93	9960921787	8	WASHER, 8.4
94	9933930001	19	SCREW, hex, M8 x 20 -8.8
95	003792053	AR	NUT, hex, n.B., VM8 -8
96	006340781	AR	SCREW, hex, n.B., M8 x 16 -8.8

025 OUTPUT MEMBER

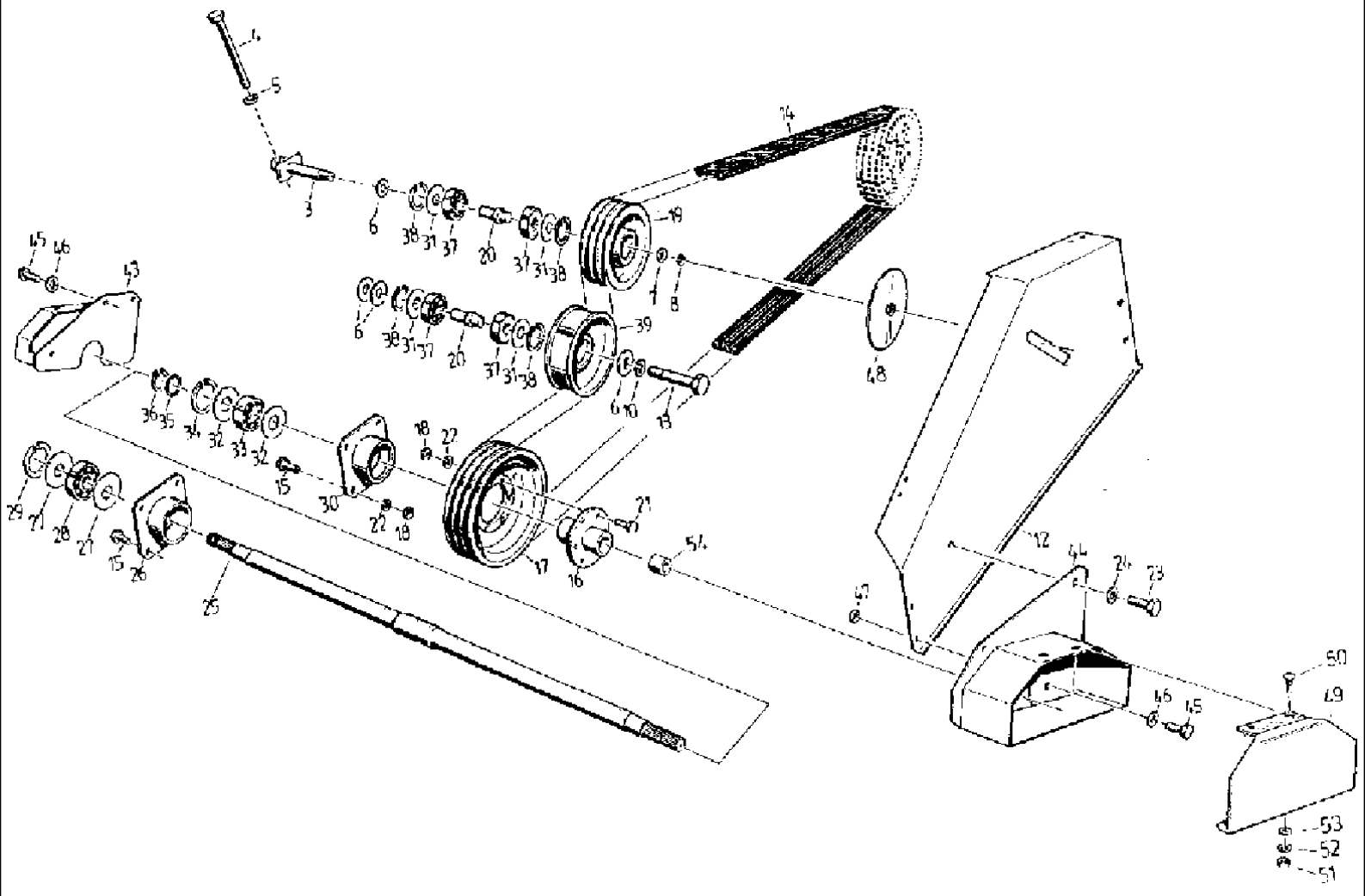

527 CASE IH COMBINE (1/98-12/98)

025 OUTPUT MEMBER

Ref	Part Number	Qty	Description
3	4260715150	1	PIN, LARGE, BOLT tensioning
4	4260715167	1	STEM, SPINDLE
5	4221602872	1	WASHER,
6	9965924623	4	WASHER, 22 x 45 x 5
7	9960964450	1	WASHER, 17
8	9961911462	1	WASHER, LOCK, SPRING, B16
10	9961911583	1	WASHER, LOCK, SPRING, B20
12	4260715175	1	PROTECTOR,
13	003790670	1	SCREW, hex, M20 x 100 -8.8
14	061004680	1	V-BELT, composite, 4 HB 4060
15	006344037	8	SCREW, hex, M10 x 25 -8.8
16	060196742	1	FLANGE,
17	061004816	1	GROOVED PULLEY, V-BELT
18	006213935	14	NUT, hex, M10 -8
19	061004777	1	TIGHTENER SHEAVE, IDLER inter.
20	4260715134	2	BUSHING,
21	9933931123	6	SCREW, hex, M10 x 30 -8.8
22	9999853166	14	PLATE, LOCKING, WASHER, VSF -B10
23	9933930001	4	SCREW, hex, M8 x 20 -8.8
24	9999853158	4	PLATE, LOCKING, WASHER, VSF -B8
25	061031570	1	SHAFT,
26	4260702644	1	HOUSING, BEARING, right side
27	4260702652	2	SEAL WASHER,
28	9902889384	1	BEARING, self-alinging, ball, 1209
29	9964917842	1	CIRCLIP, 85 x 3
30	4260715101	1	HOUSING, BEARING, left side
31	4221613063	4	SEAL WASHER,
32	4260702267	2	SEAL WASHER,
33	9902889608	1	BEARING, self-alinging, ball, 1210
34	9964917850	1	CIRCLIP, 90 x 3
35	9962918322	1	CIRCLIP, A50
36	9964917303	1	CIRCLIP, 50 x 2
37	9902890474	4	BEARING, ball, 6206RS
38	9964917818	4	CIRCLIP, 62 x 2
39	061004793	1	TIGHTENER SHEAVE, PULLEY idle
43	060037407	1	SHIELD, GUARD P-T-O-shaft, right side
44	060037351	1	PLATE, GUARD P-T-O-shaft, left side
45	006338385	4	SCREW, hex, M6 x 16 -8.8
46	060150770	6	PLATE, LOCKING, WASHER, VSF -B6
47	006213734	2	NUT, hex, M6 -8
48	061004697	1	COVER, PROTECTIVE, ROLLER cape
49	060037431	2	COVER,
50	9945926075	4	SCREW, round head, M6 x 16 -8.8
51	006267111	4	NUT, hex, M6 -8
52	9961919927	4	WASHER, SPRING, B6

025 OUTPUT MEMBER

Ref	Part Number	Qty	Description
53	9960921633	4	WASHER, A 8.4

027 MOWER REVERSING GEAR

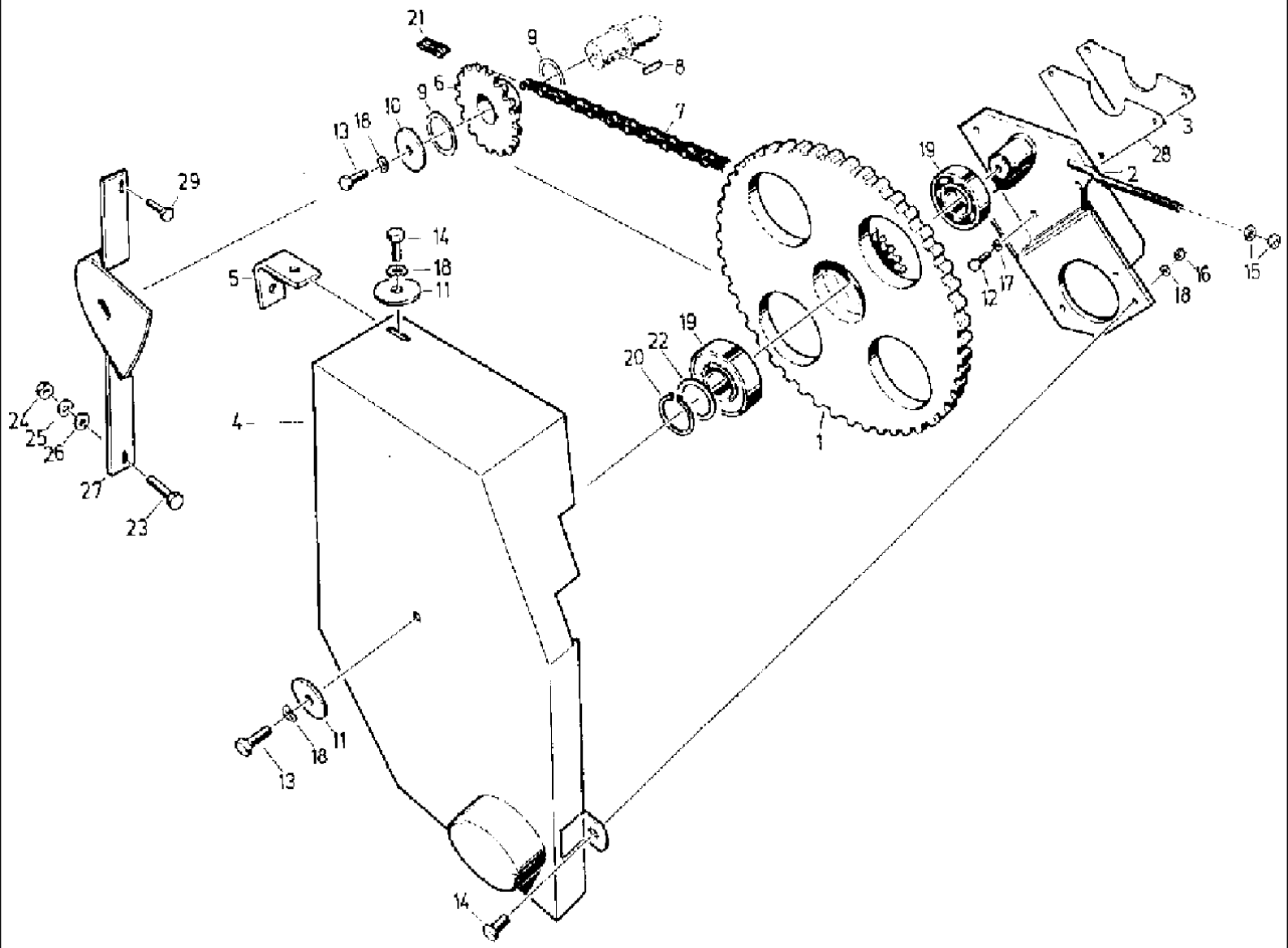

527 CASE IH COMBINE (1/98-12/98)

027 MOWER REVERSING GEAR

Ref	Part Number	Qty	Description
1	4260711918	1	WHEEL,
2	4260711901	1	BASE, PLATE
3	4260711887	1	PLATE, threaded
4	4260711870	1	GUARD,
5	4260711895	1	RETAINER,
6	4260711862	1	DRIVE SPROCKET, 19Z
7	060504843	1	CHAIN (AGRICULTURE), roller, 12 -B -1 x 62E
8	9965956446	1	KEY, BUCKET TOOTHRT, fitting, 10 x 8 x 45
9	9965967770	8	SHIM, precision, 42 x 52 x 2
10	060162315	1	DISC, C11 x 50
11	9964964463	2	DISC, C11 x 32
12	9933932028	3	SCREW, hex, M12 x 35 -8.8
13	9933931123	2	SCREW, hex, M10 x 30 -8.8
14	006344037	2	SCREW, hex, M10 x 25 -8.8
15	006214140	2	NUT, hex, M12 -8
16	006213935	1	NUT, hex, M10 -8
17	006501557	3	WASHER, SPRING, B12
18	9961920004	4	WASHER, SPRING, B10
19	9902890505	2	BEARING, ball, 6207RS
20	9964917248	1	CIRCLIP, 35 x 1.5
21	9917905716	1	LINK, CHAIN, D12, B1
22	003791542	AR	SHIM, precision, n.B., 35 x 45 x 1
23	006341018	1	SCREW, hex, M8 x 20 -8.8
24	006213830	2	NUT, hex, M8 -8
25	9999853117	2	PLATE, LOCKING, WASHER, VSF M8
26	9960921633	2	WASHER, A 8.4
27	060038352	1	PROTECTOR, inlet
28	060038311	AR	PLATE, n.B.
29	006341397	1	SCREW, hex, M8 x 30 -8.8

028 MOWER TRAILER - HLS

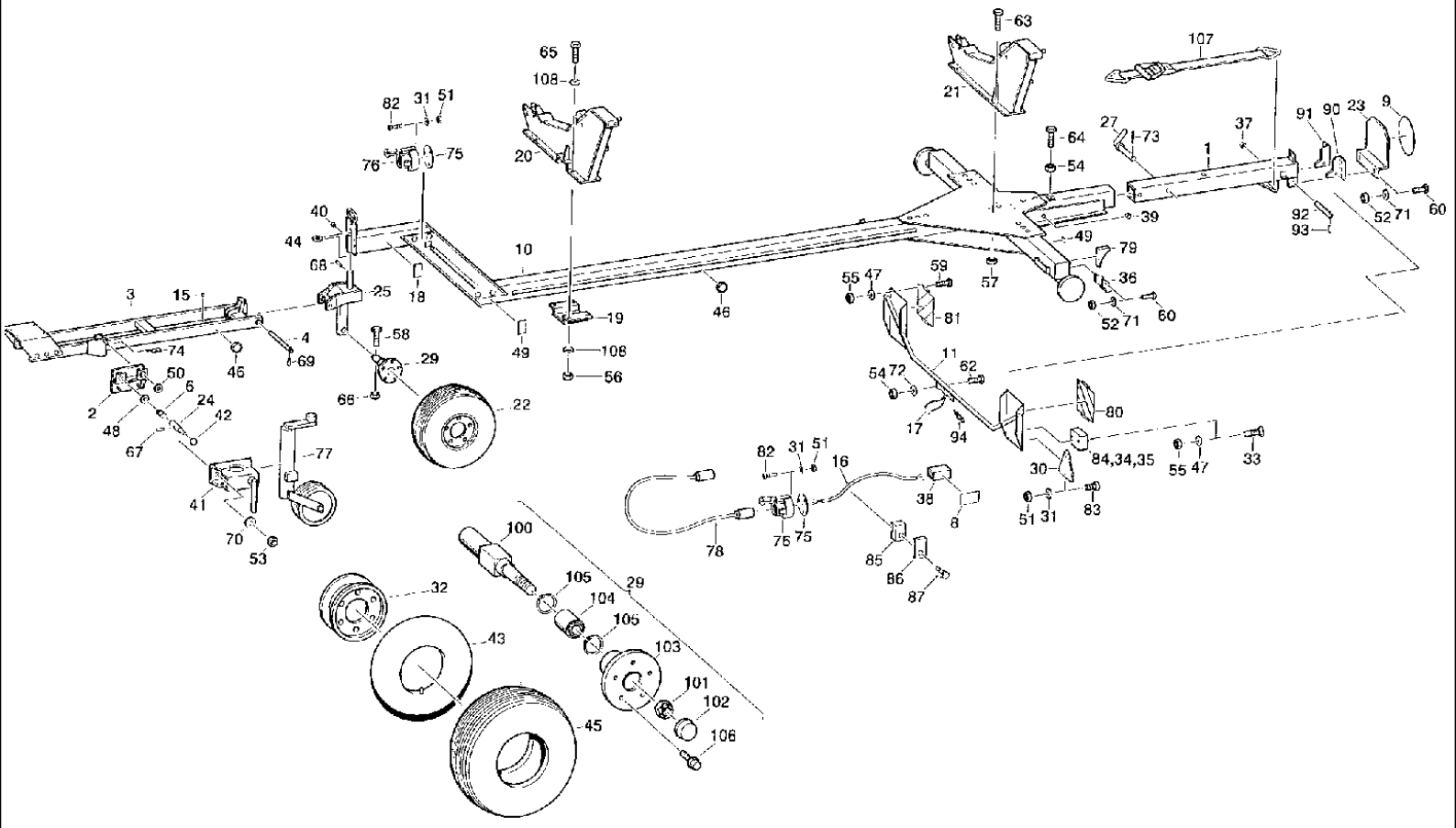

527 CASE IH COMBINE (1/98-12/98)

028 MOWER TRAILER - HLS

Ref	Part Number	Qty	Description
1	061041000	1	CARRIER, light
2	061039690	1	ANCHOR, fastening
3	061038938	1	TOW BAR,
4	061039801	1	SCREW, tow bar
6	9973879424	1	SPRING, COMPRESSION, B1, 8 x 24 x 5.5
8	061039867	1	BLADE, inlet
9	060000202	1	DECAL, plate
10	061038351	1	FRAME, 20/22 ft
11	061039625	1	FRAME,
15	4240031395	8	SLEEVE,
16	060174938	1	CABLE,
17	060175473	2	CABLE,
18	009113301	3	SYMBOLS,
19	060178660	2	STIRRUP, BOW clamping
20	31283272	1	SUPPORT,
21	31283377	1	SUPPORT,
22	061039377	1	WHEEL,
23	061039826	1	PLATE, LARGE,
24	061039746	1	BOLT, locking
25	061038786	1	FORK, front
27	061039770	1	PIN, SPLIT (COTTER),
29	060513530	1	PIN, LARGE, AXLE typ, VL10
30	060502616	2	SPOTLIGHT, REFLECTOR rear
31	9961919902	7	WASHER, SPRING, B5
32	060515001	1	RIM,
33	9938928076	4	SCREW, lens head, M6 x 20 -5.8
34	9019974357	4	BULB, 21W, 24V
35	060500647	2	BULB, 10W, 24V
36	060502665	2	SUPPORT, BRACKET
37	9972877046	6	GROMMET, CABLE
38	060502673	1	CONNECTOR, CABLE
39	060503014	1	GROMMET, CABLE
40	003617056	2	NIPPLE, LUBE,
41	060514958	1	HOLDER, clamping
42	9910883908	1	BUTTON, HANDLE ball, C32FS
43	060502593	1	AIR TUBE, 185, 14
44	006609262	2	SHIM, precision, 50 x 62 x 2
45	060502585	1	TIRE, RUBBER, 185, R14C, 8PR
46	060500575	8	REFLECTOR,
47	006510927	12	WASHER, A6.4
48	006511204	1	WASHER, A21
49	4221600067	3	DECAL, SHIELD sliding
50	060509261	1	WASHER, 26
51	006213478	7	NUT, hex, M5 -8
52	006213830	10	NUT, hex, M8 -8

527 CASE IH COMBINE (1/98-12/98)

028 MOWER TRAILER - HLS

Ref	Part Number	Qty	Description
53	006213935	2	NUT, hex, M10 -8
54	006214140	5	NUT, hex, M12 -8
55	006267111	12	NUT, hex, M6 -8
56	006267152	4	NUT, hex, M16 -8
57	006267177	8	NUT, hex, M12, SW18 -8
58	9932931735	1	SCREW, hex, M10 x 80 -8.8
59	006338385	8	SCREW, hex, M6 x 16 -8.8
60	006340781	10	SCREW, hex, M8 x 16 -8.8
62	9933931863	4	SCREW, hex, M12 x 25 -8.8
63	006346666	8	SCREW, hex, M12 x 30 -8.8
64	9933932108	1	SCREW, hex, M12 x 40 -8.8
65	060502632	4	SCREW, hex, M16 x 60 -8.8
66	060516076	1	NUT, hex, M10 -8
67	9967942262	1	SPLIT PIN/SAFETY PIN, roll, 5 x 28
68	060501904	1	SPLIT PIN/SAFETY PIN, roll, 10 x 70
69	060516068	2	SPLIT PIN/SAFETY PIN, roll, 6 x 50
70	9999853094	2	PLATE, LOCKING, WASHER, VSF -M10
71	9999853117	10	PLATE, LOCKING, WASHER, VSF -M8
72	9999853125	4	PLATE, LOCKING, WASHER, VSF -M12
73	006402361	7	PIN, SPLIT (COTTER), split, 4 x 25
75	4140751514	1	PLUG, PLATE socket
76	007067048	1	SOCKET/RECEPTACLE,
77	060514941	1	PINION, WHEEL support, 200 x 50
78	060516043	1	SHIN, LINE connecting
79	060502657	2	BLOCK, CHOCK wheel
80	060515018	1	TAG, CONSOLE warning
81	060515026	1	TAG, CONSOLE warning
82	9936939312	3	SCREW, M5 x 35 -5.8
83	9936938096	4	SCREW, M5 x 16 -5.8
84	060509864	2	LIGHT, TAIL, combined
85	060520923	1	CIRCLIP, body, 110PP
86	006646250	1	COVER, PLATE, DP1
87	006334646	1	SCREW, hex, M6 x 30 -8.8
90	061041074	1	HOLDER, ANGLE support, left hand
91	061041105	1	HOLDER, ANGLE support, right hand
92	061040981	1	PIN, LARGE, BOLT
93	9967942262	2	SPLIT PIN/SAFETY PIN, roll, 5 x 28
94	060508814	1	SPLIT PIN/SAFETY PIN, hair, cotter, 4
95	007067048	1	SOCKET/RECEPTACLE,
96	4140751514	1	PLUG, PLATE socket
97	9936938231	3	SCREW, M5 x 35 -8.8
98	9961919902	3	WASHER, SPRING, B5
99	006213478	3	NUT, hex, M5 -8
100	060527503	1	BODY, axle
101	060527511	1	SAFETY NUT, lock

527 CASE IH COMBINE (1/98-12/98)

028 MOWER TRAILER - HLS

Ref	Part Number	Qty	Description
102	060527528	1	CAP, hub
103	060527536	1	HUB, wheel, 140 x 5
104	060527544	1	SPACER, BEARING compact
105	9964917826	2	CIRCLIP, 72 x 2.5
106	060527552	5	SCREW, wheel
107	31283440	2	TENSIONER, tape
108	9999855498	8	X, WASHER locking, VSF M 16

031 BRAKE - MOWER TRAILER - HLS

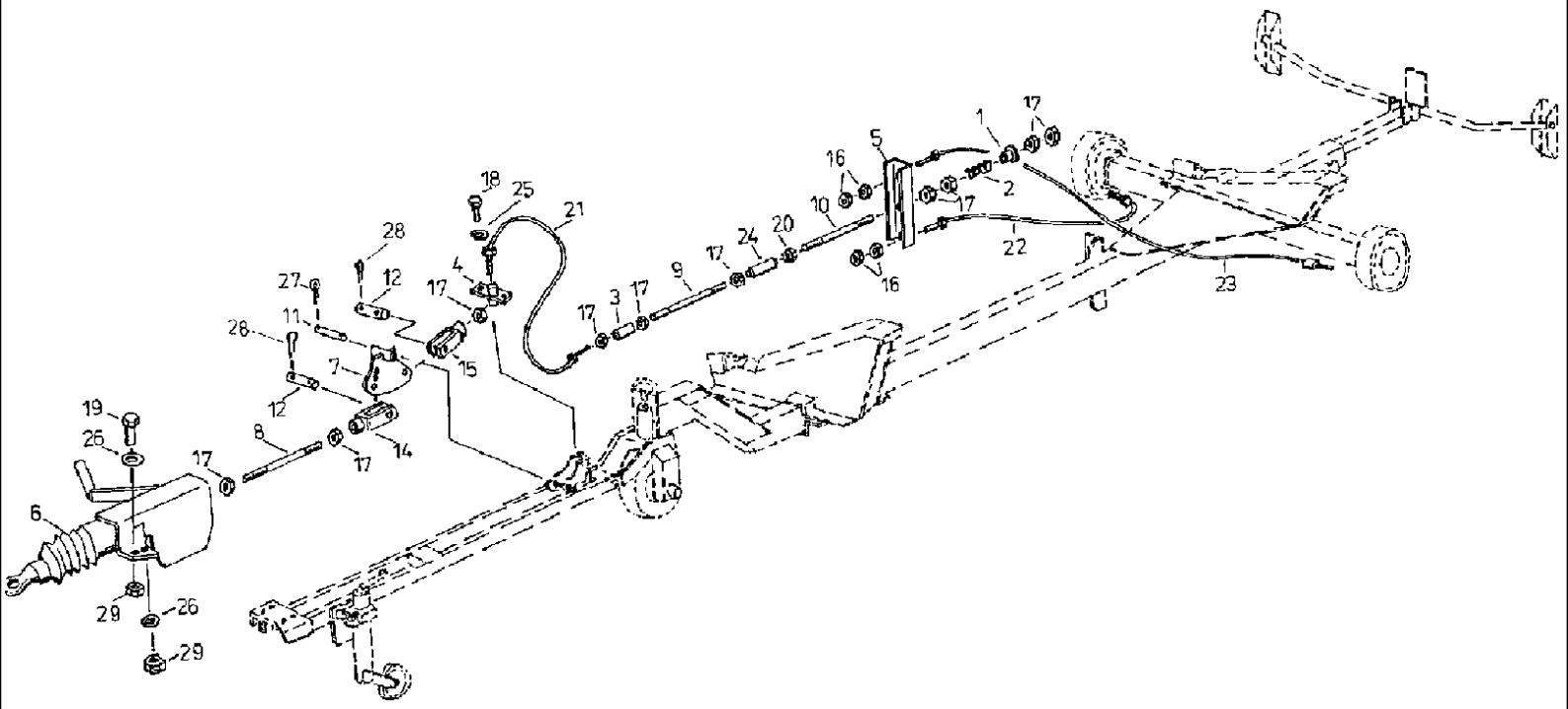

527 CASE IH COMBINE (1/98-12/98)

031 BRAKE - MOWER TRAILER - HLS

Ref	Part Number	Qty	Description
1	061039512	1	RING, bush
2	061039520	1	SPRING, COMPRESSION, C2.5 x 28 x 17.5
3	061039473	1	SLEEVE, TRANSMISSION,
4	061039432	1	BRACKET, ROPE
5	061039504	1	SUPPORT, SCALES rope
6	060518375	1	DRAW HOOK, equipment, KFZ35 -D1
7	061039408	1	LEVER, bent
8	061039465	1	ROD, TIE tension
9	061039481	1	ROD, TIE tension
10	061039498	1	ROD, TIE tension
11	9949864153	1	PIN, LARGE, BOLT, B16, H11 x 70
12	003798854	2	PIN, LARGE, BOLT, B12, H11 x 45 x 32
14	9969883240	1	CRADLE, HEAD fork, G12 x 48
15	060515942	1	CRADLE, HEAD fork, G12 x 24
16	006213830	4	NUT, hex, M8 -8
17	006214140	10	NUT, hex, M12 -8
18	9933929065	2	SCREW, hex, M10 x 20 -8.8
19	9933932108	4	SCREW, hex, M12 x 40 -8.8
20	060515975	1	NUT, hex, M12LH -8
21	060515887	1	ROPE, METAL, bowden
22	060515895	1	ROPE, METAL, bowden
23	060515901	1	ROPE, METAL, bowden
24	9952949226	1	NUT, hex, M12
25	9999853094	2	PLATE, LOCKING, WASHER, VSF M10
26	9999853174	6	PLATE, LOCKING, WASHER, VSF B12
27	006402361	2	PIN, SPLIT (COTTER), 4 x 25
28	9963949795	4	PIN, SPLIT (COTTER), 3.2 x 20
29	9954897654	4	NUT, hex, VM12 -8

032 REAR WHEEL WITH BRAKE - HLS

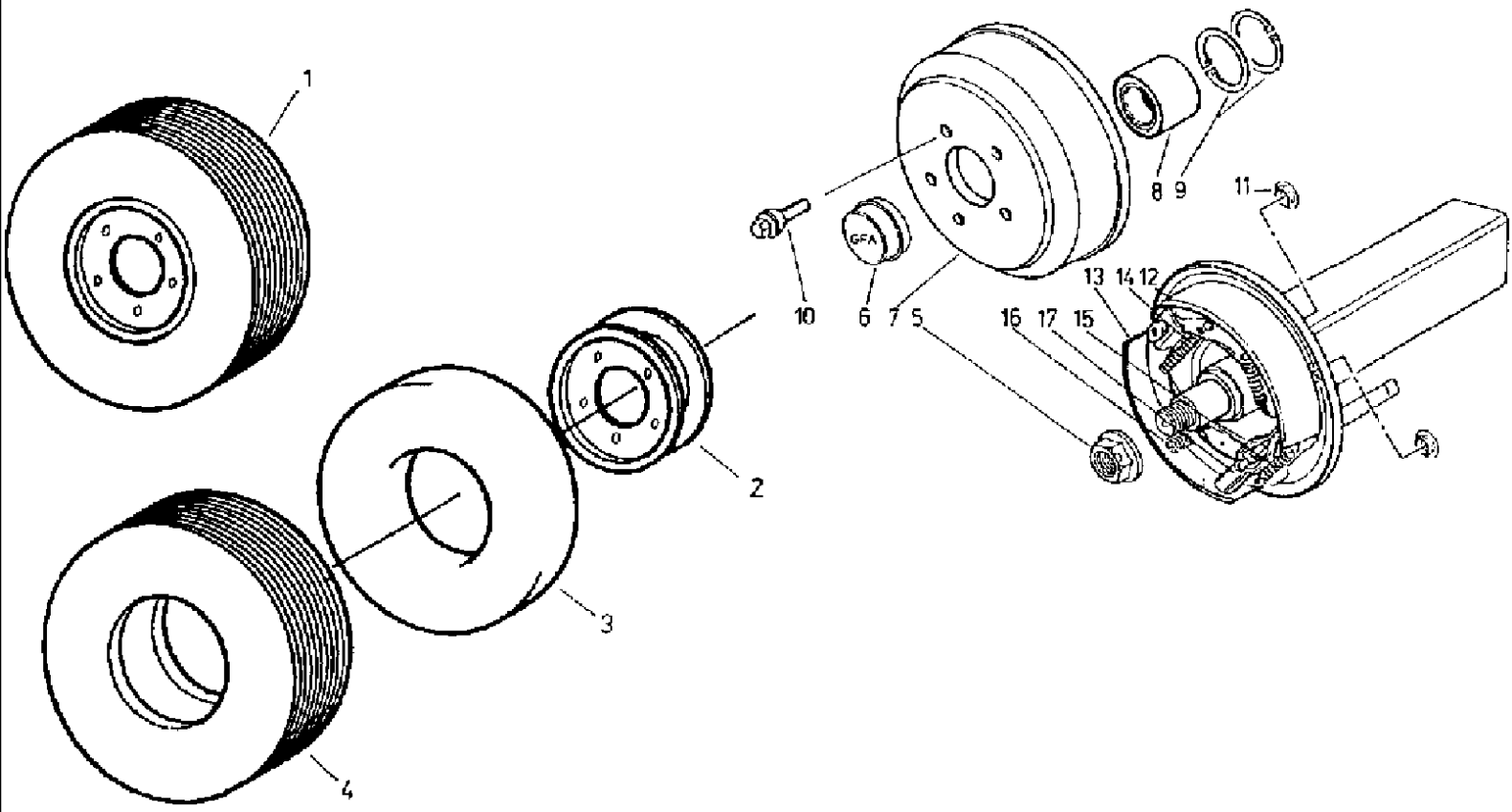

527 CASE IH COMBINE (1/98-12/98)

032 REAR WHEEL WITH BRAKE - HLS

Ref	Part Number	Qty	Description
1	061039377	3	WHEEL,
2	060515001	3	RIM,
3	060502593	3	AIR TUBE, 185 -14
4	060502585	3	TIRE, RUBBER, 185, R14C, 8PR
5	060527511	1	SAFETY NUT, lock
6	060527528	1	CAP, hub
7	060527560	1	HUB, brake, 140 x 5
8	060527544	1	SPACER, BEARING compact
9	9964917826	2	CIRCLIP, 72 x 2.5
10	060527552	5	SCREW, wheel, M14 x 1.5 x 25
11	060527577	2	VANEUM GAUGE, PLUG pipe
12	060527585	1	SHOE, BRAKE,
13	060527593	1	SHOE, BRAKE,
14	060527608	1	SPRING, TENSION,
15	060527616	1	SPRING, TENSION,
16	060527624	1	SPRING, COMPRESSION, pressure
17	060527632	1	LOCK, spreader

033 STALK DIVIDER - HLS

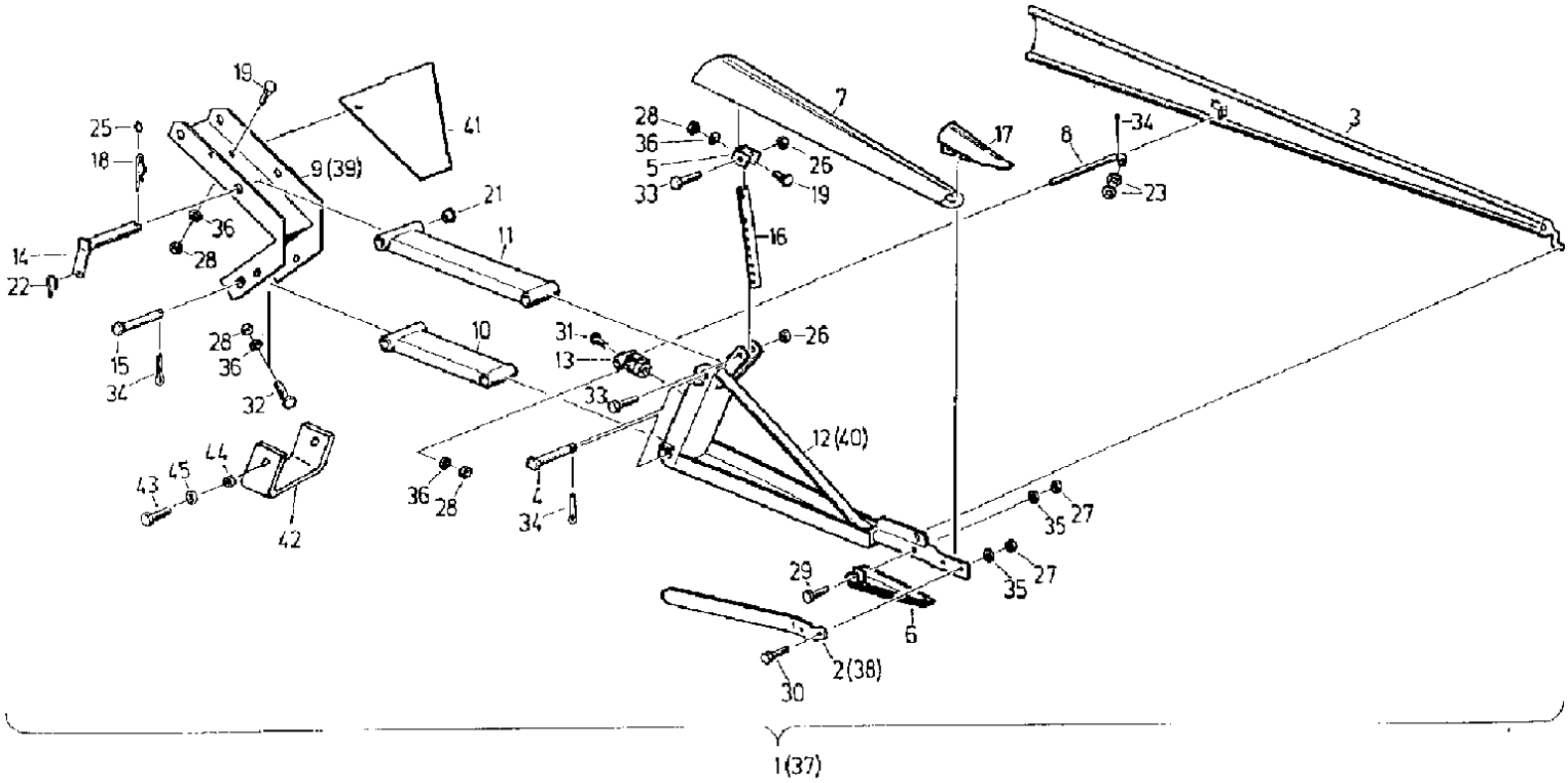

527 CASE IH COMBINE (1/98-12/98)

033 STALK DIVIDER - HLS

Ref	Part Number	Qty	Description
1	061064562	1	DIVIDER ASSY., STALK, left hand
2	061043968	1	DEFLECTOR, left hand
3	060194925	2	SEPARATOR, DIVIDER outer
4	061064361	4	PIN, LARGE, BOLT
5	061043943	2	BOW,
6	4223645462	2	RUNNER, SHOE sliding
7	061064618	2	DIVIDER, main
8	4223645776	2	HOOK,
9	061064546	1	RETAINER, MOUNT
10	061064320	2	BAR, ROD connecting
11	061064337	2	BAR, ROD connecting
12	061064513	2	FRAME,
13	061062737	2	BOW,
14	061064417	2	PIN, HITCH, PLUG
15	061064386	2	PIN, LARGE, BOLT
16	061043951	2	SUPPORT,
17	4223645446	2	POINT, HEAD divider
18	003792045	2	SPLIT PIN/SAFETY PIN, PLUG spring
19	9945635828	4	SCREW, flat round head, M12 x 30 -8.8
21	060514121	16	HALF BUSH, BEARING journal, GFM- 2528 -21
22	060508582	4	HOOK, 24 x 3.1
23	9960922265	4	WASHER, 15
25	4240054440	2	RING, key, A -20
26	9954897654	4	NUT, hex, VM, 12 -8
27	006213935	6	NUT, hex, M10 -8
28	006214140	10	NUT, hex, M12 -8
29	9933929057	2	SCREW, hex, M10 x 55 -8.8
30	9933931180	4	SCREW, hex, M10 x 35 -8.8
31	9933931863	2	SCREW, hex, M12 x 25 -8.8
32	9933932028	4	SCREW, hex, M12 x 35 -8.8
33	9933932567	4	SCREW, hex, M12 x 70 -8.8
34	006402361	4	PIN, SPLIT (COTTER), 4 x 25
35	9999853166	6	PLATE, LOCKING, WASHER, VSF B10
36	9999853174	14	PLATE, LOCKING, WASHER, VSF B12
37	061064570	1	DIVIDER ASSY., STALK, right hand
38	061043590	1	DEFLECTOR, right hand
39	061064634	1	RETAINER, MOUNT, right hand
41	061049602	1	PANEL, deflector
42	061064587	2	STOP, end
43	006346537	4	BOLT, hex, M12 x 25 -8.8
44	006214140	4	NUT, hex, M12 -8
45	006576084	4	WASHER, locking, VSF B12

035 SEPARATOR

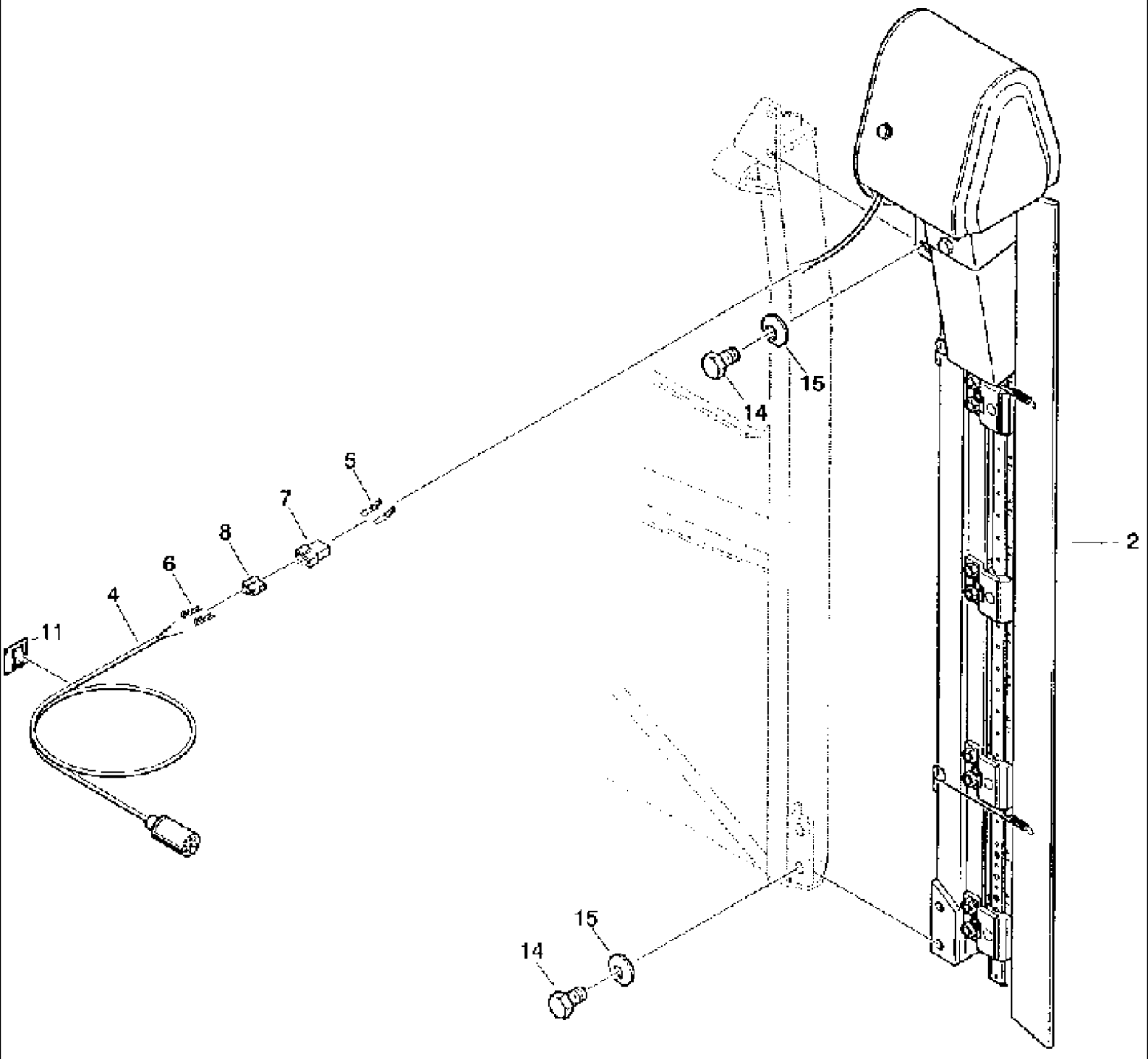

527 CASE IH COMBINE (1/98-12/98)

035 SEPARATOR

Ref	Part Number	Qty	Description
1	060511963	1	SEPARATOR, right hand
4	021208473	1	CABLE,
5	003792881	2	TERMINAL, SPADE, PLUG flat
6	060512722	2	TERMINAL, SPADE, BUSHING flat pin
7	003793288	1	CONNECTOR, HOUSING flat plug
8	060509003	1	BOX, TERMINAL, HOUSING flat, pin, bush, D
11	9019059944	15	CLIP, CABLE, ACC38 -A -20
14	006346408	4	SCREW, hex, M12 x 20 -8.8
15	9999853174	4	PLATE, LOCKING, WASHER, VSF B12

036 CUTTERBAR

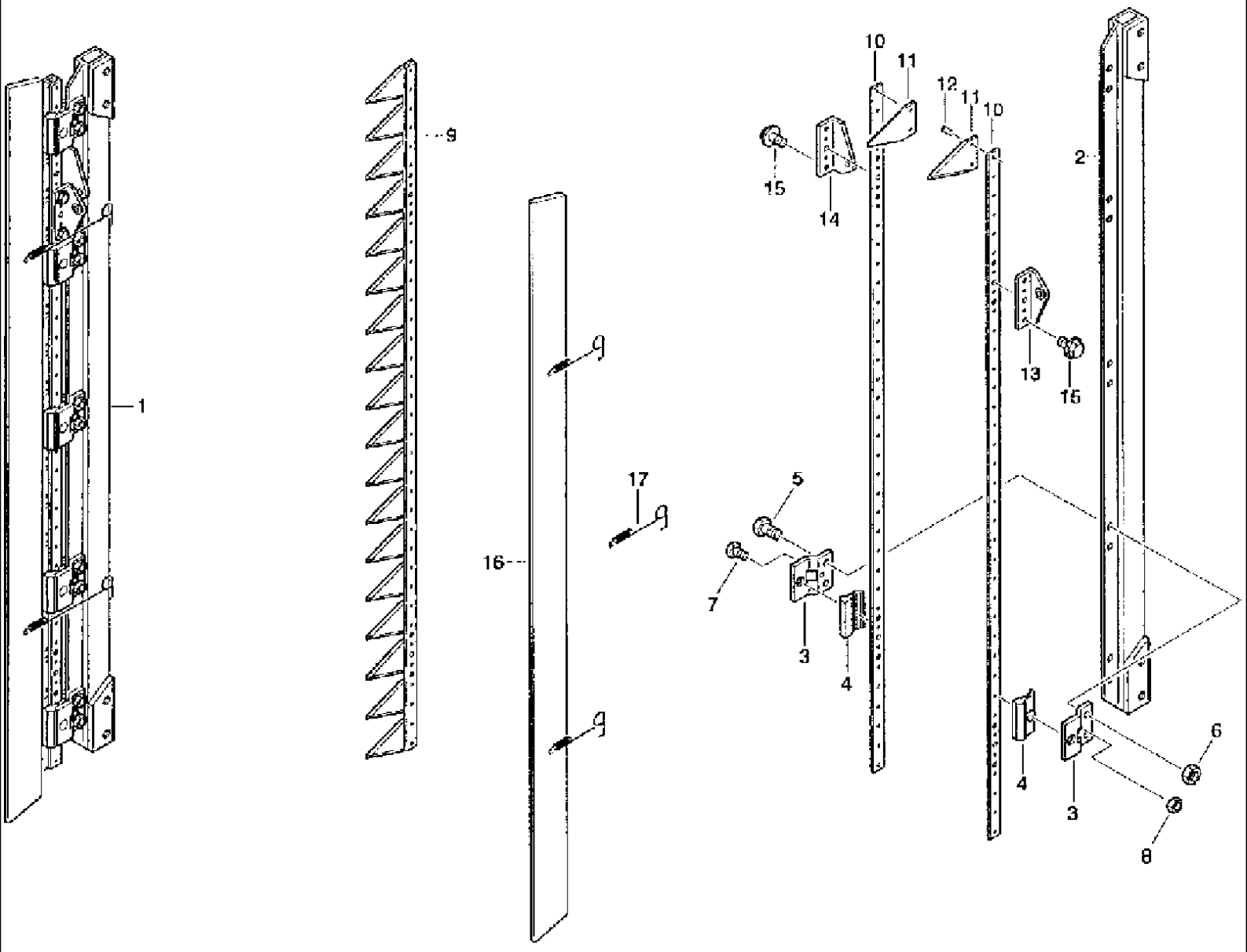

527 CASE IH COMBINE (1/98-12/98)

036 CUTTERBAR

Ref	Part Number	Qty	Description
1	03266187	1	KNIFE ASSY., CUTTERBAR
2	03266195	1	BAR,
3	03266201	10	GUIDE, HOLDER knife
4	03266218	10	PLATE, KNIFE GUIDE,
5	06335358	10	SCREW, hex, M10 x 25
6	06257528	10	NUT, lock, M10
7	03272956	5	SCREW, hex, M8 x 20
8	03266105	5	NUT, lock, M8
9	03266226	2	BLADE, ASSEMBLY knife
10	03266234	2	BAR, knife back
11	03266242	36	KNIFE SECTION,
12	03266523	72	RIVET, countersunk, 6 x 15
13	03266250	1	HEAD, KNIFE, front
14	03266267	1	HEAD, KNIFE, rear
15	03266113	4	SCREW, locking
16	03266275	1	PROTECTOR, knife
17	03266283	2	SPRING, COIL, tension

037 CRANK DRIVE WITH CRANK GUARD

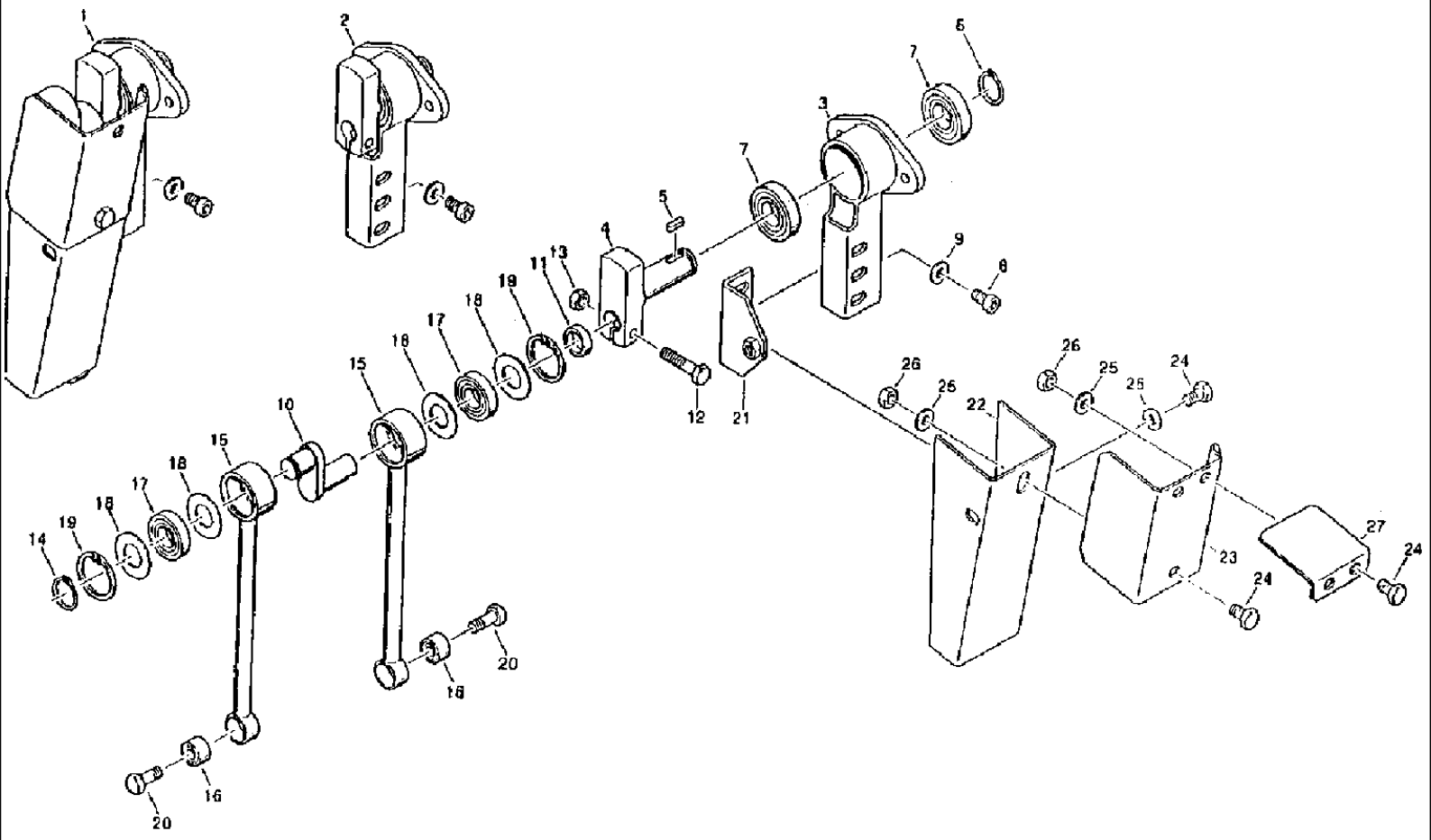

527 CASE IH COMBINE (1/98-12/98)

037 CRANK DRIVE WITH CRANK GUARD

Ref	Part Number	Qty	Description
1	03266291	1	MECHANISM, ASSEMBLY crank drive
2	03266306	1	BEARING, ASSEMBLY
3	03266314	1	HOLDER, CASE crank
4	03266322	1	SHAFT, drive
5	03266531	1	KEY, BUCKET TOOTHRT, 8 x 7 x 20
6	06450713	1	CIRCLIP, 30 x 1.5
7	03671808	2	BEARING, deep groove ball, 6206, 2RS
8	234957N0	2	SCREW, M12 x 20
9	06556513	2	WASHER, 13
10	03266347	1	CRANKSHAFT,
11	03266355	1	BACK-UP RING, distance
12	06347031	1	SCREW, hex, M12 x 55
13	06257503	1	SAFETY NUT, hex, VM12 -8
14	06450617	1	CIRCLIP, 25 x 1.2
15	03266371	2	ROD, CONNECTING,
16	03266121	2	BUSHING, rubber metal
17	03266541	2	BEARING, self-alinging, 2205 -2RS
18	03266138	4	BACK-UP RING, supporting
19	06452965	2	CIRCLIP, 52 x 2
20	03266146	3	SCREW, hex, M12 x 32
21	03266396	1	PROTECTOR, HOLDER crank
22	03266402	1	PROTECTOR, crank
23	03266410	1	PROTECTOR,
24	06346424	2	SCREW, hex, M12 x 20
25	06556513	2	WASHER,
26	06216271	2	NUT, hex, M12
27	03266427	1	PROTECTOR,

038 ELECTRIC MOTOR GUARD

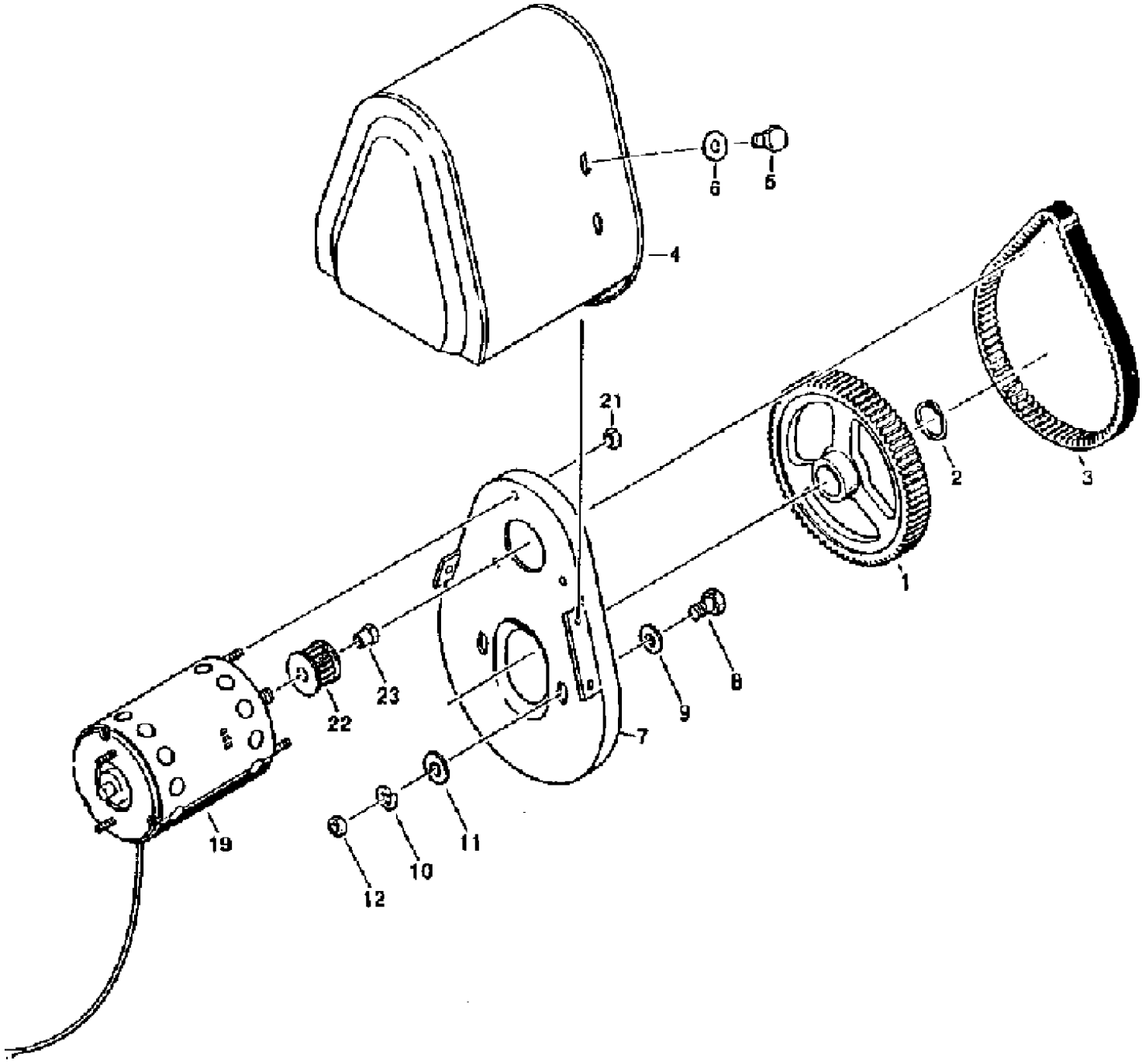

527 CASE IH COMBINE (1/98-12/98)

038 ELECTRIC MOTOR GUARD

Ref	Part Number	Qty	Description
1	03266443	1	DISC, NOTCHED, GEAR toothed, 114
2	06450713	1	CIRCLIP, 30 x 1.6
3	03266451	1	BELT, toothed, 127
4	03266476	1	PROTECTOR, crank and v-belt
5	03266154	3	SCREW, hex, M10 x 10
6	03252181	5	WASHER, 11
7	03266484	1	COVER, PLATE flange
8	06335358	2	SCREW, hex, M10 x 25
10	06154901	2	WASHER, spring, B10
11	06558513	2	WASHER 13
12	06213910	2	NUT, hex, M10
19	03266492	1	MOTOR, ELECTRIC, gpa, 24V
21	03266170	3	NUT, hex, M6
22	03266507	1	DISC, NOTCHED, GEAR toothed, 18
23	03266515	1	NUT, special

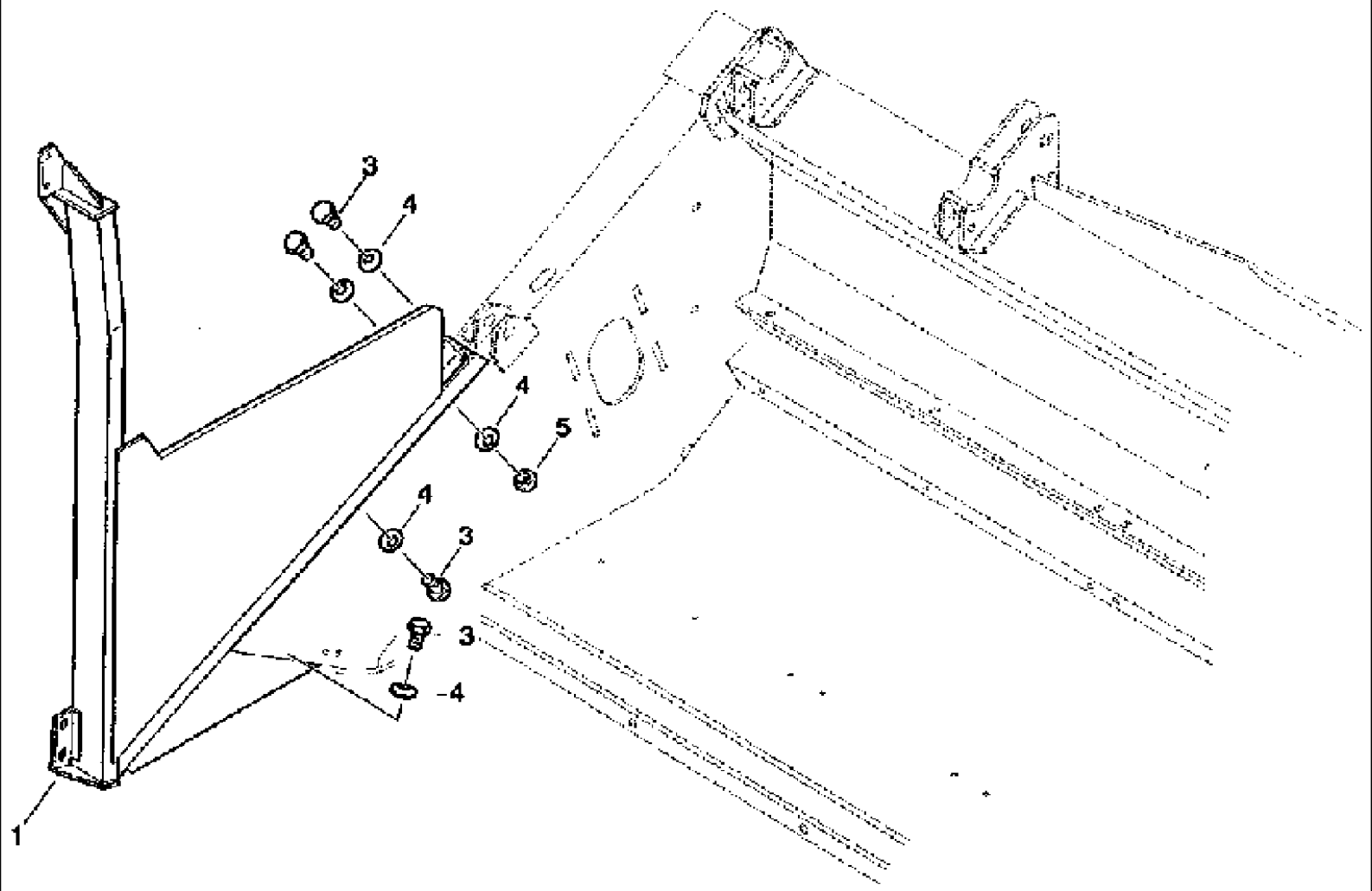
3
4
4
5
4
3
3
4
1

527 CASE IH COMBINE (1/98-12/98)

039 INTAKE

Ref	Part Number	Qty	Description
1	31282271	1	SUPPORT, intake, right hand
3	08346713	4	BOLT hex, M12 x 30 -8.8
4	06577060	5	WASHER, locking, VSF B12
5	06214278	1	NUT, hex, M12 -8

040 DRUM

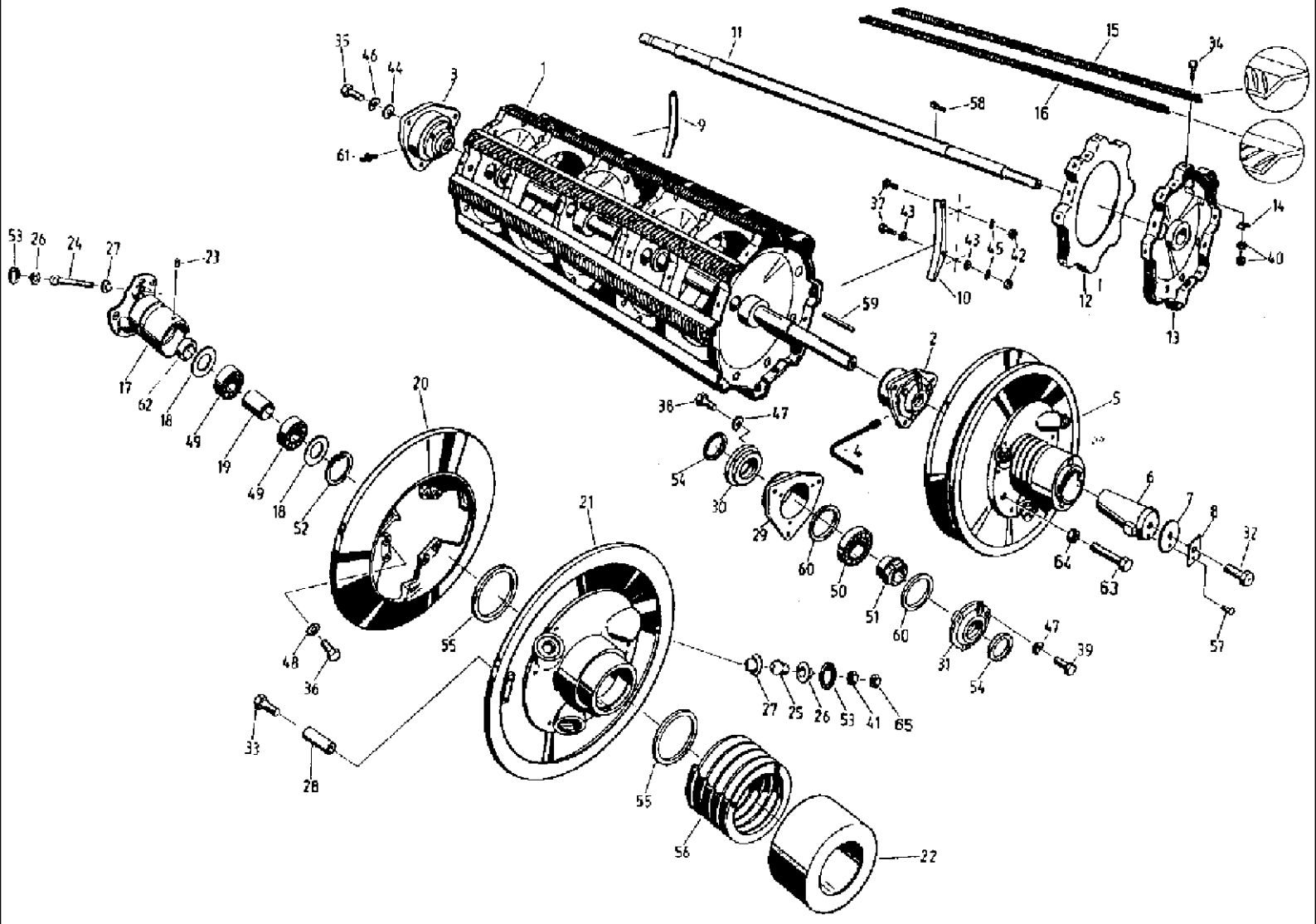
35
46
44
3
1
11
15
34
58
16
9
61
37
43
14
43
45
42
40
10
12
59
13
53
26
24
27
23
2
17
62
18
49
19
49
18
52
20
38
47
54
30
4
5
29
60
50
51
60
6
7
8
32
64
63
57
21
48
36
55
31
54
47
39
27
25
26
53
41
65
33
28
55
56
22

527 CASE IH COMBINE (1/98-12/98)

040 DRUM

Ref	Part Number	Qty	Description
1	4270718867	1	DRUM, CYLINDER
2	061001540	1	BEARING, right hand
3	061001573	1	BEARING, left hand
4	4270718891	1	LINE, PIPING lubricant, right hand
5	061031722	1	PULLEY ASSY., CYLINDER var-drive
6	060169120	1	DRIVE DOG,
7	060159988	1	WASHER,
8	060159996	1	PLATE, LOCKING,
9	4221617926	1	SLAT, STRIP cover
10	4221617934	1	SLAT, STRIP cover
11	4270718922	1	SHAFT,
12	4221617983	2	FLANGE, HUB cylinder
13	4270718914	4	DRUM, HUB cylinder
14	4221618092	16	BLOCK,
15	4270718930	4	BAR, RIBBED, CYLINDER, right hand
16	4270718947	4	BAR, RIBBED, CYLINDER, left
17	4260703034	1	HUB,
18	060168626	2	SEAL WASHER,
19	4270718963	1	BUSHING,
20	061031730	1	DISC, PULLEY half vari-drive
21	061031763	1	DISC, PULLEY half vari-drive
22	4260690542	1	SLEEVE, SPRING
23	4260690550	3	STUD,
24	061031796	3	BALL, with tie rod
25	4240025524	3	BALL, with socket
26	4240029786	6	CUP, BALL, SEAT
27	4240029794	6	CUP, BALL, SEAT
28	4240029800	3	BUSHING,
29	4270718971	2	HOUSING, BEARING,
30	061001557	2	COVER,
31	061001565	2	COVER,
32	4221617918	1	SCREW, hex
33	9933933672	3	SCREW, hex, M12 x 80 -8.8
34	006347281	48	SCREW, hex, M12 x 50 -10.9
35	9933932028	6	SCREW, hex, M12 x 35 -8.8
36	9933931123	6	SCREW, hex, M10 x 30 -8.8
37	9933930001	4	SCREW, hex, M8 x 20 -8.8
38	9933929200	6	SCREW, hex, M6 x 12 -8.8
39	006338385	6	SCREW, hex, M6 x 16 -8.8
40	9950896310	96	NUT, hex, M12 -10
41	006213935	3	NUT, hex, M10 -8
42	006213830	4	NUT, hex, M8 -8
43	4260689114	4	WASHER,
44	4250132814	6	WASHER,
45	9961920061	4	WASHER, SPRING, B8

527 CASE IH COMBINE (1/98-12/98)

040 DRUM

Ref	Part Number	Qty	Description
46	006501557	6	WASHER, SPRING, B12
47	9961919927	12	WASHER, SPRING, B6
48	9961963891	6	DISC, NOTCHED, WASHER toothed, J10
49	9902890128	2	BEARING, ball, 6010
50	003665594	2	BEARING, self aligning slide, 2215 K.C3
51	003674136	2	PIN, ROLL, SLEEVE tension, H315
52	006453267	1	CIRCLIP, 80 x 2.5
53	9964917537	6	CIRCLIP, 48 x 1.6
54	9910912088	6	BUSHING, LARGE, RING felt, 65
55	9907914454	2	O-RING, 110 x 3
56	9973882983	1	SPRING, COMPRESSION, C12 x 160 x 7.5
57	9967884251	1	PIN , HEAD LESS, grooved, 6 x 16
58	9965955654	4	KEY, gib head, 20 x 12 x 70
59	4270718906	1	KEY, BUCKET TOOTHRT, FITTING
60	4260702820	2	SPACER,
61	9920925531	1	NIPPLE, LUBE, BM10 x 1
62	061017564	1	SPACER,
63	9933958125	1	SCREW, hex, M16 x 80 -8.8
64	9950896841	1	NUT, hex, M16 -8
65	006116067	3	NUT, hex, VM 10 -SW16 -8

042 CONCAVE WITH ADJUSTMENT

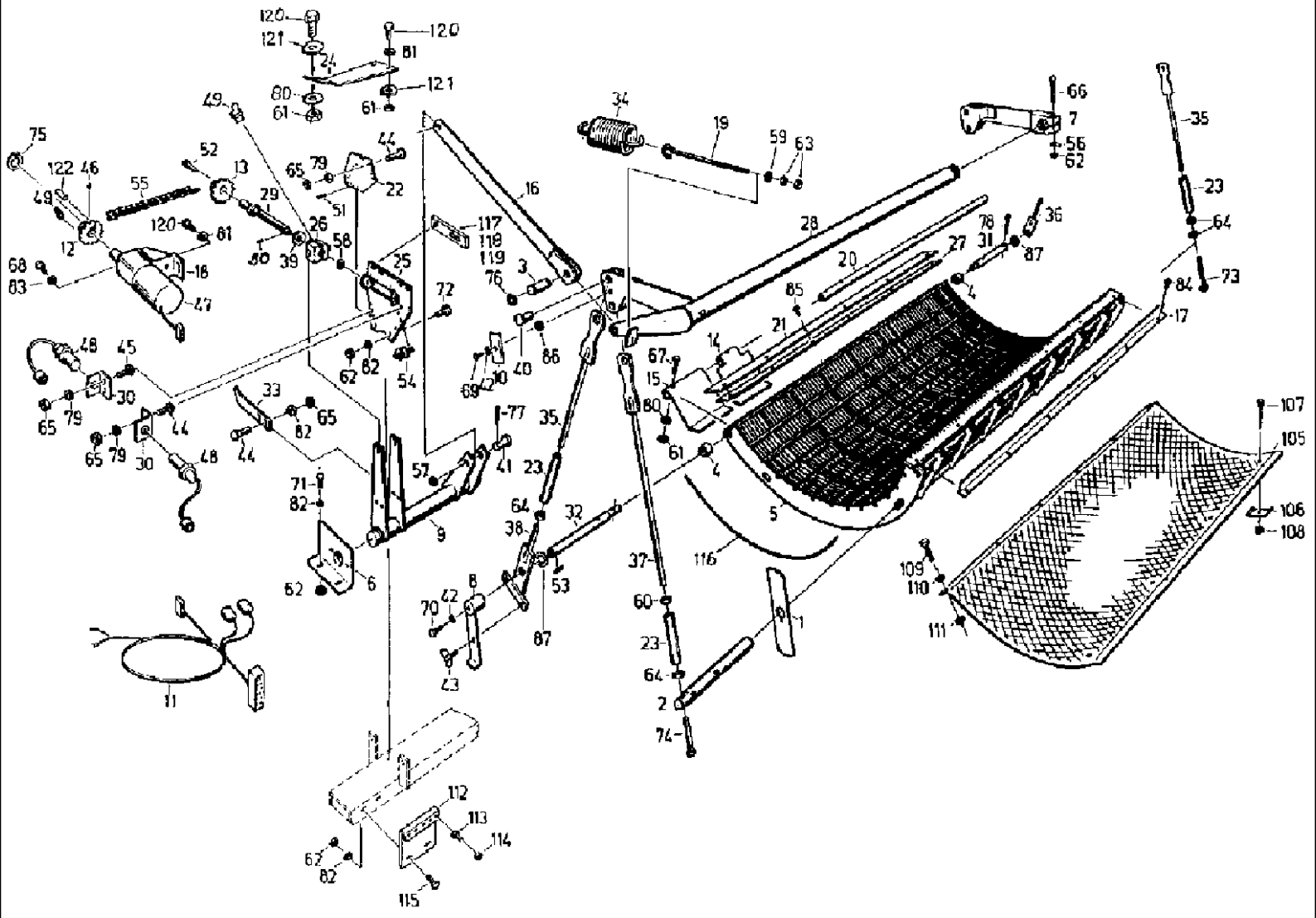

527 CASE IH COMBINE (1/98-12/98)

042 CONCAVE WITH ADJUSTMENT

Ref	Part Number	Qty	Description
1	4260691672	4	COVER, PROTECTIVE,
2	060010501	2	PIN, LARGE, BOLT
3	061013825	1	PIN, LARGE, BOLT
4	4270717841	2	FLANGE, SLEEVE spacer
5	061001364	1	CONCAVE, 9.7 mm
5	061000603	1	CONCAVE, 7.5 mm
6	061052011	1	BRACKET, holder
7	4260691697	1	LEVER,
8	061019068	1	LEVER,
9	061051927	1	LEVERSHAFT,
10	4260711155	2	CAP,
11	061052124	1	HARNESS,
12	061051984	1	PINION, SPROCKET, Z24
13	061052003	1	DRIVE SPROCKET, Z24
14	4221619358	5	FLAP,
15	061001485	2	FLAP,
16	061051814	1	TRUSS ROD, connecting
17	061001790	1	RAIL, guide
18	061052044	1	SUPPORT, HOLDER motor
19	061013987	1	SCREW, eyelet
20	061001493	1	PIPE,
21	061001782	1	RAIL,
22	061052085	1	SECTOR, segment
23	4260691568	4	MOUNTING CLIP, PIECE tension
24	061051726	1	CROSSBAR, fin
25	061051830	1	PARTITION, retaining
26	061051902	1	NUT, regulation
27	061019043	1	BLOCK, BASE
28	061031923	1	SHAFT, adjusting
29	061051871	1	SHAFT, adjusting
30	061053061	2	ANGLE BAR,
31	4260691656	1	SHAFT, CROSS, PIN
32	4260691664	1	SHAFT, CROSS, PIN
33	061052093	1	INDICATOR,
34	9974881266	1	SPRING, TENSION,
35	4260691703	3	ROD, tension
36	4260691711	1	ROD, tension
37	4260691728	1	ROD, tension
38	061019051	1	ROD, tension
39	060526881	1	WASHER, THRUST, RAIL
40	9949865468	4	PIN, LARGE, BOLT, A20H11 x 30 -ST
41	060526912	1	PIN, LARGE, BOLT, B20H11 x 50 x 42 -ST
42	9961920061	3	WASHER, SPRING, B8
43	9944926806	1	THUMB SCREW, wing, M8 x 20 -ST
44	9945926067	5	SCREW, flat round head, M6 x 20 -8.8

527 CASE IH COMBINE (1/98-12/98)

042 CONCAVE WITH ADJUSTMENT

Ref	Part Number	Qty	Description
45	9945926130	2	SCREW, flat round head, M6 x 25 -8.8
46	9947940303	1	PIN, threaded, M6 x 8 -14H
47	060526832	1	MOTO-REDUCTION GEAR, geared, M80 x 40/I+P62
48	060508590	2	SWITCH, initiator, BI5U- EM18 -AN4X/S301
49	9920925492	2	NIPPLE, LUBE, AM6
50	9967942615	1	PIN, grooved, 4 x 25
52	060526904	1	KEY, gib head, 8 x 7 x 28
53	9965956060	1	KEY, BUCKET TOOTHRT, feather, A8 x 7 x 20
54	060509325	11	CLIP, plastic
55	060526898	1	CHAIN (AGRICULTURE), roller, 08B, 1 x 65L
56	9962923578	1	PLATE, LOCKING, WASHER, 10.5
57	9960922546	3	WASHER, 22
58	9960922353	1	WASHER, A17
59	060503520	1	WASHER, 13
60	9950894060	1	NUT, hex, M16LH -04
61	006213830	12	NUT, hex, M8 -8
62	006213935	13	NUT, hex, M10 -8
63	006214140	2	NUT, hex, M12 -8
64	9950896841	5	NUT, hex, M16 -8
65	006267111	7	NUT, hex, M6 -8
66	9933977851	1	SCREW, hex, M10 x 75 -8.8
67	9933930331	9	SCREW, hex, M8 x 40 -8.8
68	9933929008	4	SCREW, hex, M5 x 16 -8.8
69	006340781	2	SCREW, hex, M8 x 16 -8.8
71	006344037	8	SCREW, hex, M10 x 25 -8.8
72	9933931123	6	SCREW, hex, M10 x 30, 8.8
73	9933932784	1	SCREW, hex, M16 x 90 -8.8
74	060155115	1	SCREW, hex, M16 x 120 -8.8
75	9964917215	1	CIRCLIP, 30 x 1.5
76	9964964447	2	WASHER, LOCK, PLATE, 15
77	9963950081	1	PIN, SPLIT (COTTER), 4 x 40
78	9963950627	1	PIN, SPLIT (COTTER), 6.3 x 40
79	9999853100	7	PLATE, LOCKING, WASHER, VSF M6
80	9999853117	10	PLATE, LOCKING, WASHER, VSF M8
81	9999853158	5	PLATE, LOCKING, WASHER, VSF B8
82	9999853166	16	PLATE, LOCKING, WASHER, VSF B10
83	060505321	4	PLATE, LOCKING, WASHER, VSF M5
84	003783688	6	SCREW, verbus, M10 x 16
85	9999951076	6	SCREW, verbus, M10 x 20
86	4260689114	AR	WASHER, n.B.
87	006511317	3	WASHER, 26
105	4270717786	1	SHEET, BOTTOM clover raspe
106	4221651011	4	SHIN, PLATE fish
107	9945926356	4	SCREW, round head, M10 x 60
108	006269000	4	NUT, hex, M10, SW16 -8.8

527 CASE IH COMBINE (1/98-12/98)

042 CONCAVE WITH ADJUSTMENT

Ref	Part Number	Qty	Description
109	9933930887	6	SCREW, hex, M10 x 16 -8.8
110	9999853094	10	PLATE, LOCKING, WASHER, VSF M10
111	4250132814	6	WASHER,
112	061050323	1	PROFILE,
113	9932930613	5	SCREW, hex, M8 x 40 -8.8
114	006267080	5	NUT, hex, M8 -8.8
115	9933929065	2	SCREW, hex, M10 x 20 -8.8
116	4221650621	AR	WIRE, through, n.B.
117	061052390	1	BLOCK, n.B., (1mm)
118	061052542	1	BLOCK, n.B., (3mm)
119	061052550	1	BLOCK, n.B., (5mm)
120	9933929173	5	SCREW, hex, M8 x 25 -8.8
121	9961921673	4	WASHER, R9
122	060526840	1	PIN, grooved

045 DEFLECTOR, PROFILE SHEET

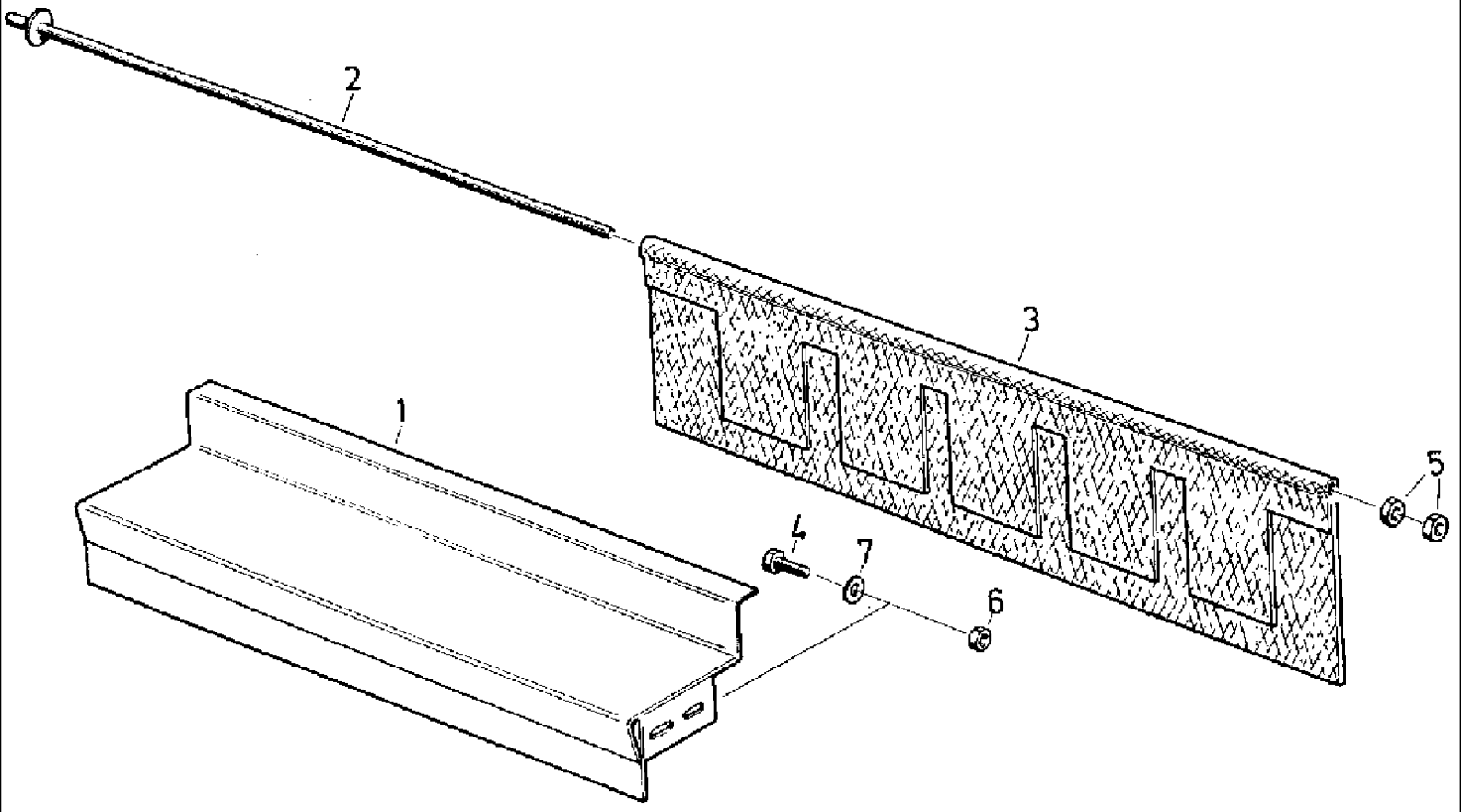

527 CASE IH COMBINE (1/98-12/98)

045 DEFLECTOR, PROFILE SHEET

Ref	Part Number	Qty	Description
1	4270718030	1	SHEET, partition
2	4270718055	1	STEM, BOLT through
3	061001516	1	COVER, SKIRT, check
4	9933932028	4	SCREW, hex, M12 x 35 -8.8
5	006214140	2	NUT, hex, M12 -8
6	006214140	4	NUT, hex, M12 -8
7	4250132814	4	WASHER,

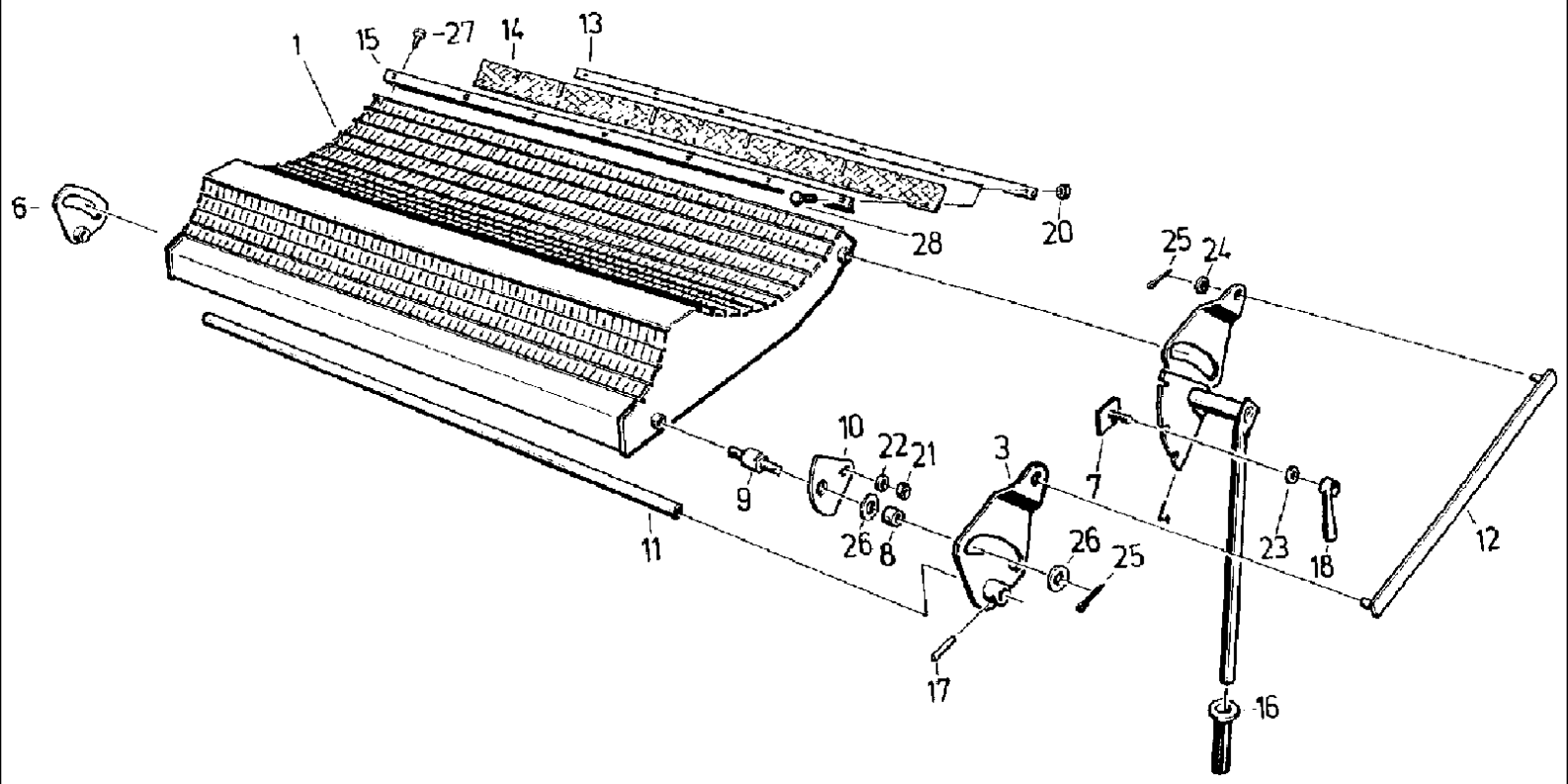
1
15
27
14
13
6
28
20
25
24
10
22
21
3
9
7
4
26
8
26
25
23
18
12
11
17
16

527 CASE IH COMBINE (1/98-12/98)

046 SEPARATOR

Ref	Part Number	Qty	Description
1	061002148	1	SEPARATOR,
3	060171783	1	LEVER, eccentric, left hand
4	060171806	1	LEVER, adjusting
6	061002123	2	LEVER, eccentric, right hand
7	060140736	1	JUNCTION BOX, BLOCK screw
8	060140752	4	ROLLER, SHIFTER,
9	060140760	4	PIN, LARGE, BOLT
10	060140777	4	PANEL, PLATE cover
11	061002115	2	SHAFT,
12	060140711	1	BRAKE, ROD connecting
13	061002211	1	RAIL,
14	061002197	1	RUBBER, PLATE
15	061002203	1	HOLDER, angle
16	060505635	1	GRIP,
17	003784422	4	SPLIT PIN/SAFETY PIN, 6 x 36
18	9910883602	1	HANDLE, tapered, N100
21	003794537	12	NUT, hex, VM8 -8
22	9960921633	4	WASHER, A8.4
23	9964924175	1	WASHER, A13
24	9960922353	2	WASHER, A17
25	006402361	6	PIN, SPLIT (COTTER), 4 x 25
26	003784430	8	WASHER, A17
27	003783688	6	SCREW, verbus, M10 x 16
28	9945926268	8	SCREW, round head, M8 x 25 -8.8

047 STONE TRAP

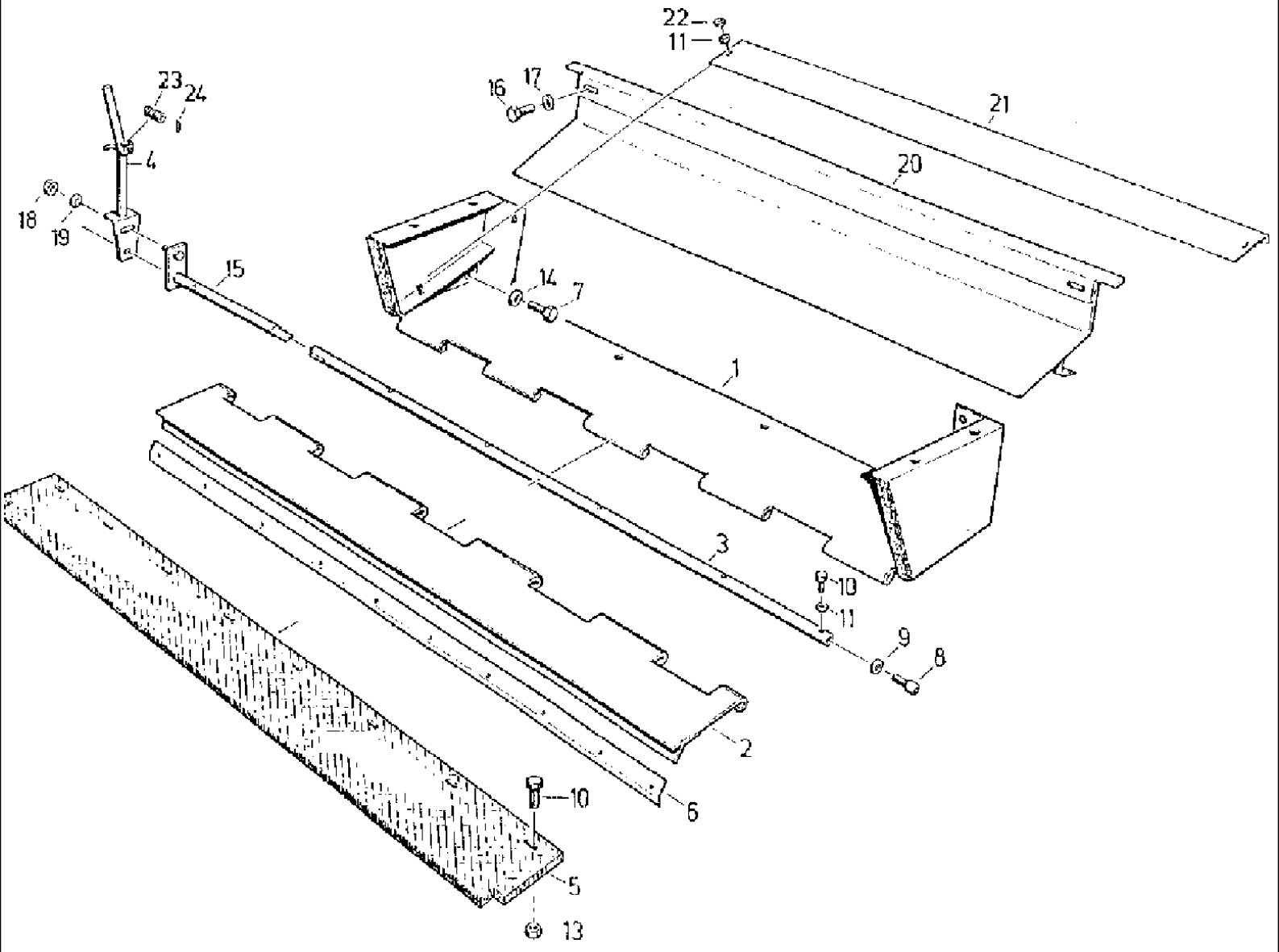

527 CASE IH COMBINE (1/98-12/98)

047 STONE TRAP

Ref	Part Number	Qty	Description
1	061017603	1	TROUGH,
2	061017732	1	FLAP,
3	061002293	1	ROTATOR, axle
4	061017572	1	LEVER, adjusting
5	061002357	1	GASKET,
6	061017757	1	RAIL,
7	9933931863	2	SCREW, hex, M12 x 25 -8.8
8	006282168	1	SCREW, cheese head, M10 x 30 -10.9
9	9999853205	1	SNAP RING, locking, VSK10
10	9933930001	6	SCREW, hex, M8 x 20 -8.8
11	9999853117	8	PLATE, LOCKING, WASHER, VSF M8
12	9933930001	10	SCREW, hex, M8 x 20 -8.8
13	003792053	10	NUT, hex, VM8, 8
14	9999853125	2	PLATE, LOCKING, WASHER, VSF M12
15	061017597	1	DRIVE DOG,
16	006344037	2	SCREW, hex, M10 x 25 -8.8
17	9999853094	2	PLATE, LOCKING, WASHER, VSF M10
18	006214140	1	NUT, hex, M12, 8
19	9999853174	1	PLATE, LOCKING, WASHER, VSF -B12
20	061017677	1	COVER, REAR, wall
21	061025548	1	SHEET, IRON adjusting
22	006213830	2	NUT, hex, M8 -8

048 STRAW WALKER

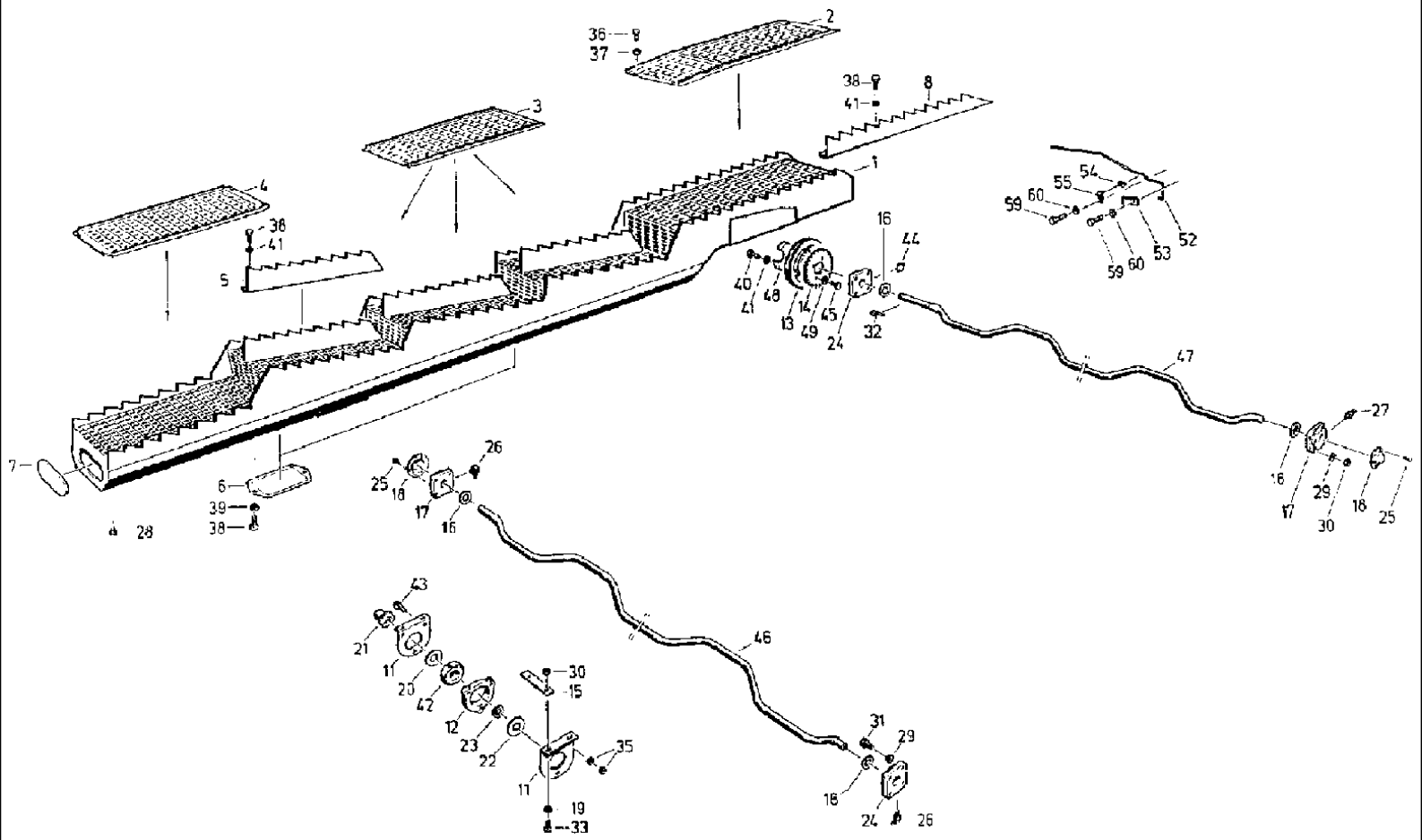

527 CASE IH COMBINE (1/98-12/98)

048 STRAW WALKER

Ref	Part Number	Qty	Description
1	061001598	6	STRAW WALKER, SECTION shaker
2	061065998	6	SIEVE, LINING shaker
3	061001620	18	LINING, shaker
4	061001645	6	LINING, shaker
5	061031152	24	CONVEYOR, rail
6	4221620698	12	COVER,
7	4221620753	6	COVER,
8	061065965	6	CONVEYOR, rail
11	061031185	24	PLATE,SIDE, part
12	061031193	12	BALL RACE, RING bearing
13	061000958	1	GROOVED PULLEY, V-BELT
14	061011060	1	PINION, spur
15	4221620593	6	BLOCK, underlay
16	4221620737	6	BLOCK,
17	4221620745	2	BEARING,
18	4221620608	2	COVER, protective
19	9999853166	48	PLATE, LOCKING, WASHER, VSF B10
20	061031232	12	WASHER,
21	060512193	12	PIN, ROLL, SLEEVE tension, 525/527
22	061031240	12	WASHER,
23	061031257	12	RING,
24	9902888287	2	CARRIER, BEARING, flange, FGE 206
25	9967884202	6	PIN , HEAD LESS, grooved, 2.5 x 8
26	9920925548	2	NIPPLE, LUBE, CM8 x 1
27	003617056	2	NIPPLE, LUBE, AM8 x 1
28	0030670468	24	BUMPER, BUFFER button
29	9961920004	16	WASHER, SPRING, B10
30	006213935	56	NUT, hex, M10 -8
31	9933931123	4	SCREW, hex, M10 x 30 -8.8
32	9965955211	1	KEY, gib head, 8 x 7 x 50
33	9945926307	48	SCREW, round head, M10 x 25 -8.8
35	006213830	72	NUT, hex, M8 -8
36	9999850813	36	SCREW, verbus, M8 x 16, 100, W, 158
37	9999851068	24	NUT, verbus, M8, 10, W, 193
38	9933929200	78	SCREW, hex, M6 x 12 -8.8
39	9961919927	12	WASHER, SPRING, B6
40	006338385	2	SCREW, hex, M6 x 16 -8.8
41	060150770	68	PLATE, LOCKING, WASHER, VSF B6
42	060512208	12	BEARING, ball, 6210, 2RS, 1K/C3
43	9932930373	36	SCREW, hex, M8 x 45 -8.8
44	4240023065	2	VANEUM GAUGE, PLUG pipe
45	9933929173	4	SCREW, hex, M8 x 25 -8.8
46	061031136	1	CRANKSHAFT,
47	061031298	1	CRANKSHAFT,
48	060152723	1	WASHER, SPECIAL,

048 STRAW WALKER

Ref	Part Number	Qty	Description
49	9999853117	4	PLATE, LOCKING, WASHER, VSF M8
52	4254127678	10	PRONG, tooth
53	060202293	20	CLAMP,
54	9907907808	10	RING, 12 x 40 x 30
55	4254127700	10	CLAMP, bearing
59	006340878	30	SCREW, hex, M8 x 18 -8.8
60	006576068	30	DISC, WASHER locking, VSF B8

050 SEPARATING DRUM

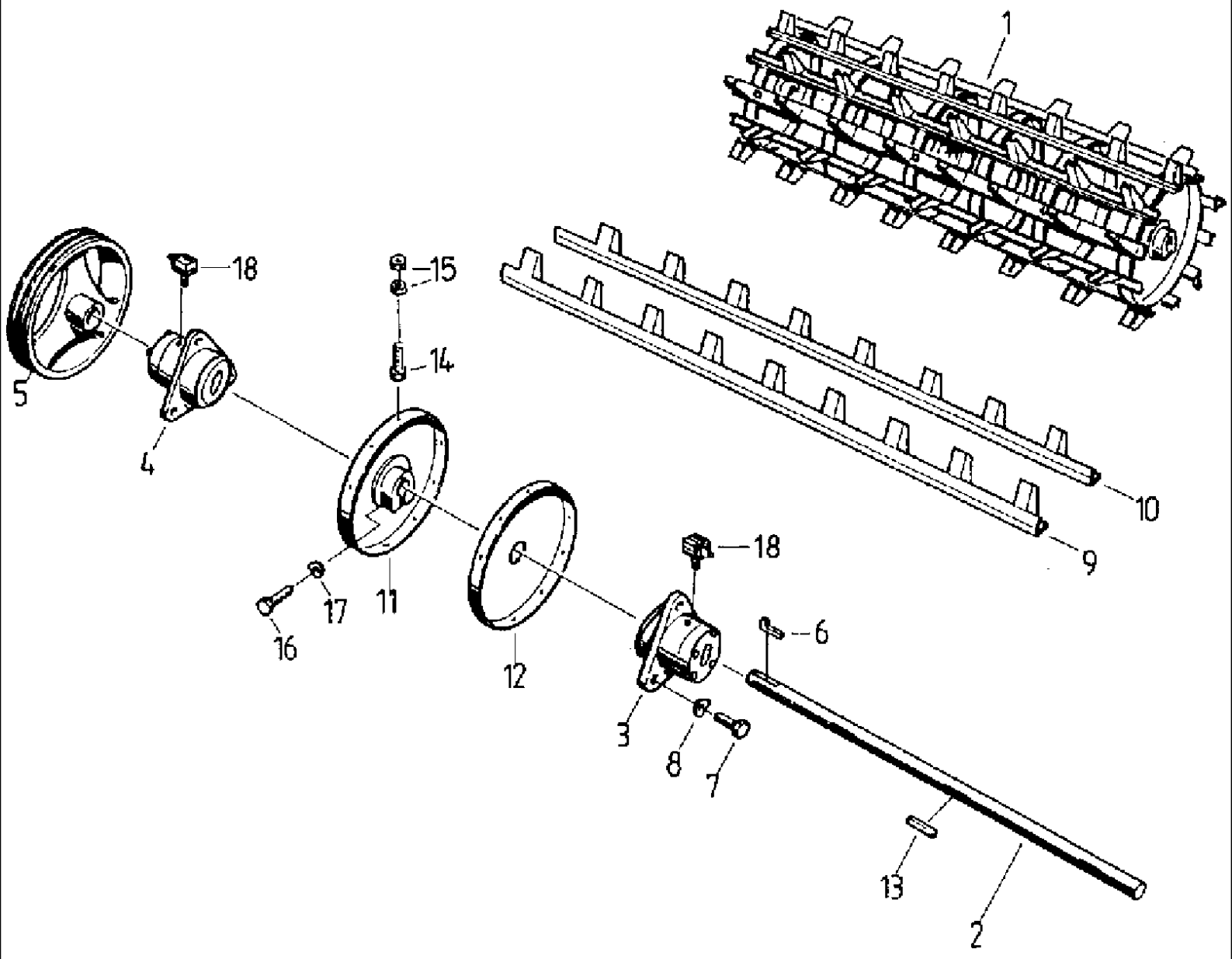

527 CASE IH COMBINE (1/98-12/98)

050 SEPARATING DRUM

Ref	Part Number	Qty	Description
1	060134850	1	DRUM, separator
2	060135031	1	SHAFT,
3	060501615	1	CARRIER, BEARING, HOUSING flange
4	060501623	1	CARRIER, BEARING, HOUSING flange
5	060135023	1	GROOVED PULLEY, V-BELT
6	003784898	1	KEY, gib head, 14 x 9 x 90
7	9933932028	6	SCREW, hex, M12 x 35 -8.8
8	9999853125	6	PLATE, LOCKING, WASHER, VSF M12
9	060134867	5	BAR, RIBBED, PLATE baffle
10	060134891	5	BAR, RIBBED, PLATE baffle
11	060134906	3	WALL, panel, complete
12	060134914	3	WALL, panel
13	003784004	3	KEY, BUCKET TOOTHRT, fitting, A14 x 9 x 70
14	006344318	60	SCREW, hex, M10 x 30 -10.9
15	9950896247	120	NUT, hex, M10 -10
16	9932932375	3	SCREW, hex, M12 x 70 -8.8
17	9999853125	3	PLATE, LOCKING, WASHER, VSF M12
18	060150801	2	NIPPLE, LUBE, CM10 x 1

051 CLEANING

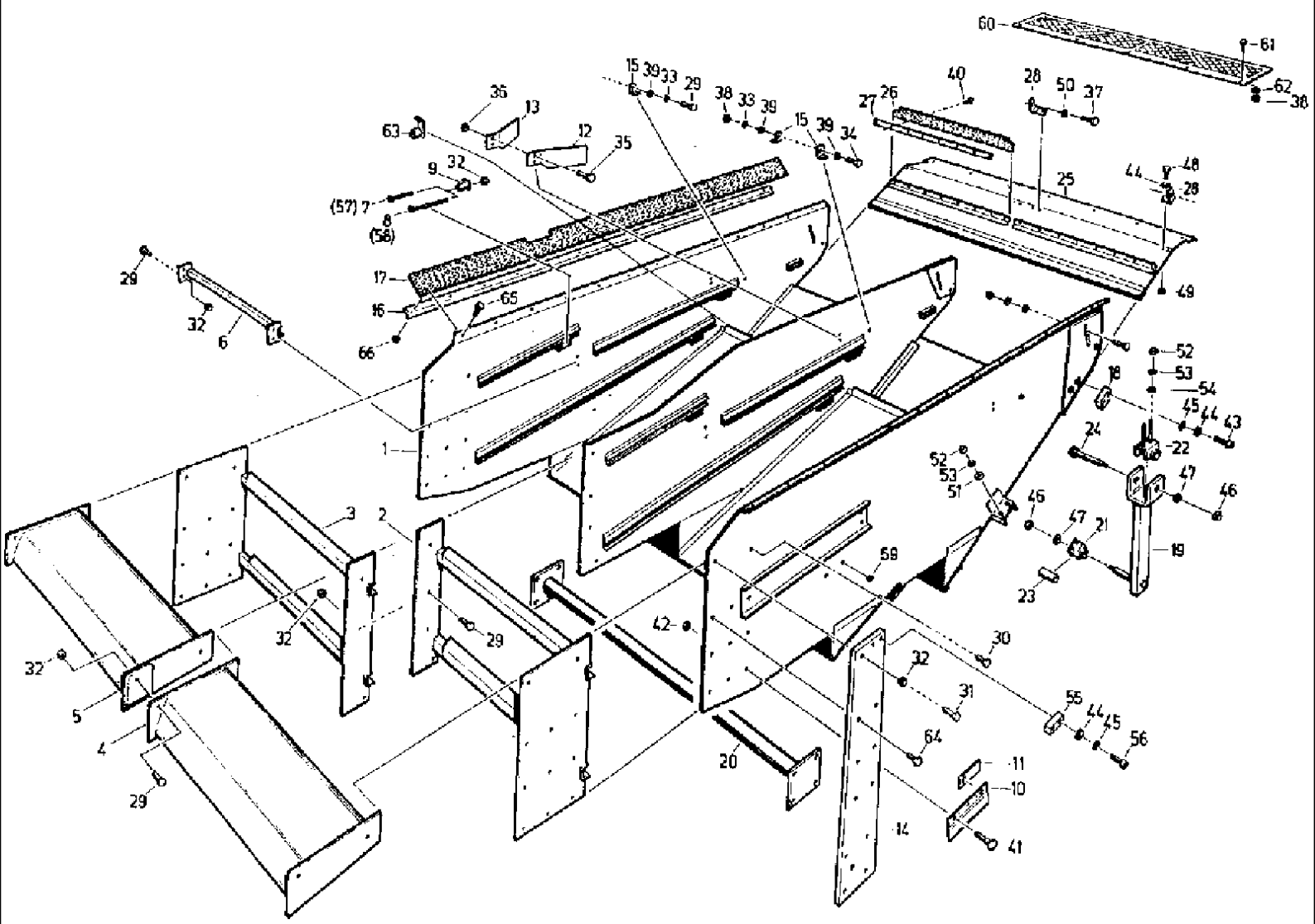

527 CASE IH COMBINE (1/98-12/98)

051 CLEANING

Ref	Part Number	Qty	Description
1	061005712	1	CASE ASSY.,
2	4270720355	1	CONNECTION, cross, left side
3	4270720363	1	CONNECTION, cross, right side
4	061005720	1	DEFLECTOR, PLATE guiding, left side
5	061005737	1	DEFLECTOR, PLATE guiding, right side
6	4247055082	2	STOP,
7	4247055090	1	SCREW, tension
8	4247055105	3	SCREW, tension
9	4247055113	4	SUPPORT, COMPONENT holding
10	4260712646	2	GUIDE,
11	061005745	2	BLOCK,
12	4270720396	2	DEFLECTOR, PLATE guiding, left side
13	4270720402	2	DEFLECTOR, PLATE guiding, right side
14	061005753	2	SIDE WALL, cheek
15	4247055138	4	ANGLE BAR,
16	4260694378	2	RAIL,
17	4270720427	2	GASKET, packing
18	060180735	2	BLOCK ASSY., SPACER
19	060111442	1	ARM, LEVER rocking
20	4247056493	2	CROSSBAR, beam
21	4240022458	2	BEARING,
22	4270720435	2	BEARING,
23	4240033846	4	BUSHING, silent
24	4240050638	2	PIN, LARGE, BOLT
25	061005987	1	WALL,
26	061005995	2	GASKET,
27	4247055781	2	RAIL,
28	061007208	3	ANGLE BAR,
29	9933929065	13	SCREW, hex, M10 x 20 -8.8
30	9933960023	4	SCREW, hex, M10 x 12 -8.8
31	9933931123	2	SCREW, hex, M10 x 30 -8.8
32	9950897818	23	NUT, hex, VM10 -8
33	9961924491	19	DISC, NOTCHED, WASHER toothed, A10.5
34	006344037	3	SCREW, hex, M10 x 25 -8.8
35	9933929200	4	SCREW, hex, M6 x 12 -8.8
36	003794096	4	NUT, hex, VM6 -8
37	9933930887	3	SCREW, hex, M10 x 16 -8.8
38	006213935	6	NUT, hex, M10 -8
39	9964962486	4	WASHER, A10.5
40	9971899315	16	RIVET, flat round, 4.0 x 16.7
41	9945926163	4	SCREW, round head, M8 x 20 -8.8
42	006367080	4	NUT hex, M8 -8
43	9937938858	4	SCREW, CYLINDER, M8 x 25 -8.8
44	9964962783	14	WASHER, A8.4
45	060501568	8	DISC, NOTCHED, WASHER toothed, J8.4

527 CASE IH COMBINE (1/98-12/98)

051 CLEANING

Ref	Part Number	Qty	Description
46	006267152	2	NUT, hex, M16, 8
47	9960922353	2	WASHER, A17
48	9933930001	6	SCREW, hex, M8 x 20, 8.8
49	003794537	6	NUT, hex, VM8, 8
50	9999853166	3	PLATE, LOCKING, WASHER, VSF B10
51	4250132814	4	WASHER,
52	006214140	8	NUT, hex, M12, 8
53	9961924506	8	DISC, NOTCHED, WASHER toothed, A12.5
54	4221602872	4	WASHER,
55	061017371	2	BLOCK ASSY., spacer
56	9937938448	4	SCREW, cylinder, M8 x 40 -8.8
57	061017933	3	SCREW, tension
58	061017917	1	SCREW, tension
59	060512931	4	COVER, PROTECTIVE,
60	061051445	1	COVER, PROTECTIVE,
61	060521032	5	SCREW, round head, M8 x 16
62	9999853117	5	PLATE, LOCKING, WASHER, VSF M8
63	061038167	4	SUPPORT, MOUNT
64	9933930887	12	SCREW, hex, M10 x 16 -8.8
65	006336736	26	SCREW, hex, M4 x 16 -8.8
66	9950897875	26	NUT, hex, M4 -8

053 CLEANING SIEVES

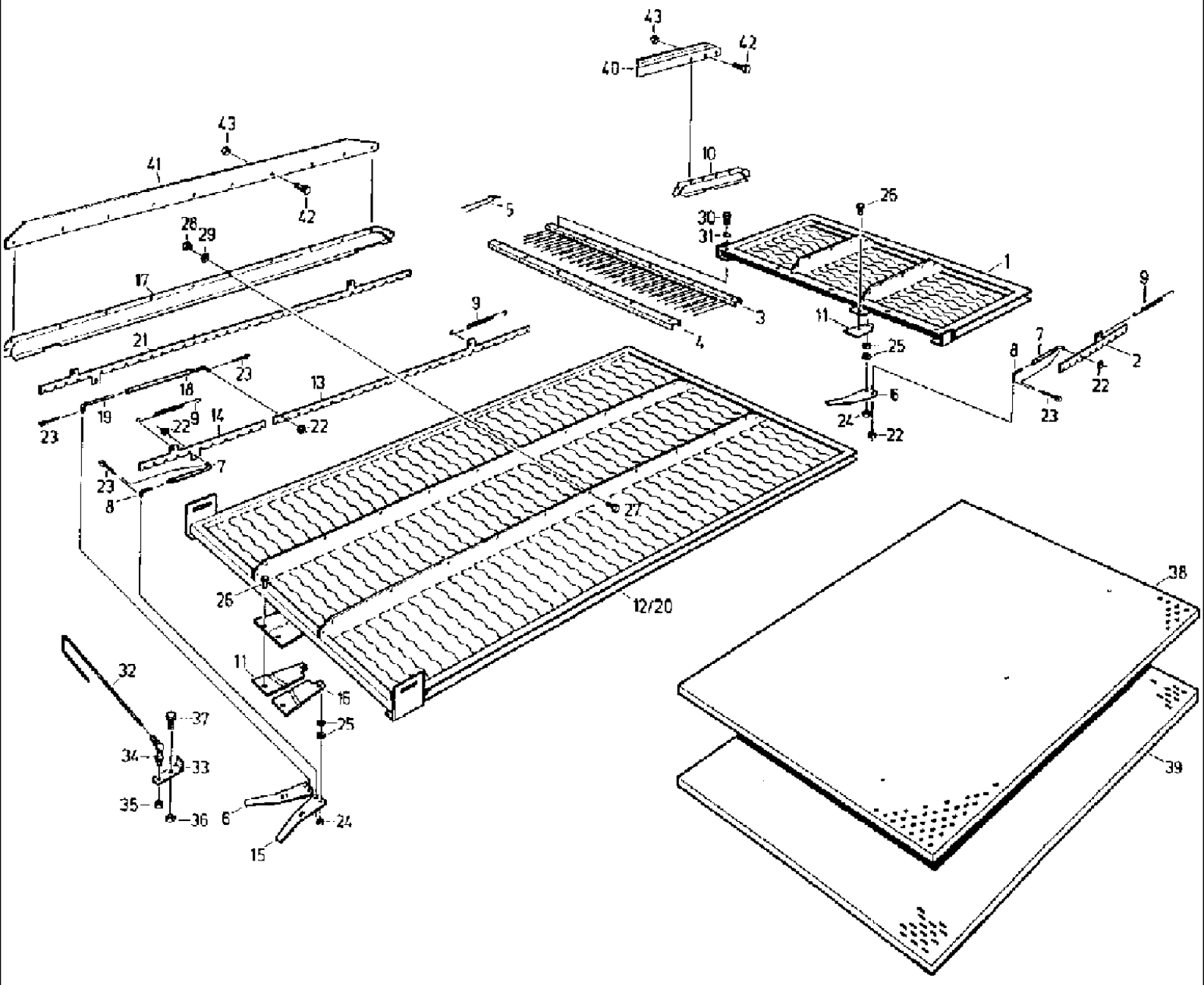

527 CASE IH COMBINE (1/98-12/98)

053 CLEANING SIEVES

Ref	Part Number	Qty	Description
1	061033476	2	SIEVE, SECTION cascade
2	4247055476	2	SPOOL, VALVE directional, control
3	061033484	2	RAKE,
4	061033492	2	CARRIER, support
5	061033515	34	PRONG, tine
6	4247058606	6	LEVER, regulating, left hand
7	4247057164	6	BAR, control
8	4247057197	4	BAR,
9	4247055314	8	SPRING, TENSION,
10	4247055507	2	COVER, PROTECTIVE,
11	4247058622	4	SEGMENT,
12	061007257	2	SIEVE, GRAIN, flap
13	061007320	2	SPOOL, VALVE directional, control
14	4247055347	2	SPOOL, VALVE directional, control
15	4247058614	4	LEVER, regulating,right hand
16	4247058630	4	SEGMENT, right hand
17	061007337	4	COVER, PROTECTIVE,
18	4247055242	2	BAR, control
19	4247055250	2	BAR,
20	061007361	2	SIEVE, GRAIN, FLAP lower
21	061007441	2	SPOOL, VALVE directional, control
22	9960921633	16	WASHER, A8.4
23	003794520	16	PIN, SPLIT (COTTER), 2.5 x 12
24	003794537	8	NUT, hex, VM8 -8
25	003783751	16	SPRING, BELLEVILLE, disk, A16
26	003794553	8	RIVET, 5 x 10
27	9933928931	54	SCREW, hex, M4 x 10 -8.8
28	9950895496	54	NUT, hex, M4 -8
29	9961964265	54	DISC, NOTCHED, lock, A4.3
30	006338385	8	SCREW, hex, M6 x 16 -8.8
31	9961919927	8	WASHER, SPRING, B6
32	061008916	2	BAR,
33	060156052	2	LEVER,
34	060501881	2	JOINT, angle, AS13
35	003794537	2	NUT, hex, VM8 -8
36	003794096	2	NUT, hex, VM6 -8
37	9930977163	2	SCREW, hex, M6 x 20 -8.8
38	061010814	1	SIEVE, round hole, Ш 1.5 mm
38	061010822	1	SIEVE, round hole, Ш 2.5 mm
38	061010830	2	SIEVE, round hole, Ш 3 mm
38	061010847	2	SIEVE, round hole, Ш 4.5 mm
38	061010855	2	SIEVE, round hole, Ш 6 mm
38	061010863	2	SIEVE, round hole, Ш 9 mm
38	061010871	2	SIEVE, round hole, Ш 12 mm
38	061010888	2	SIEVE, round hole, Ш 16 mm

053 CLEANING SIEVES

Ref	Part Number	Qty	Description
38	061010896	2	SIEVE, round hole, Ш 20 mm
39	061010902	2	SIEVE, round hole, 4.5 x 25 mm
39	061010910	2	SIEVE, round hole, 5.6 x 25 mm
40	4247055531	4	CATWALK, WEB guide
41	061011872	4	CATWALK, WEB guide
42	9933928931	28	SCREW, hex, M4 x 10 -8.8
43	060502882	28	NUT, hex, VM4 - 8

055 GRAIN PAN

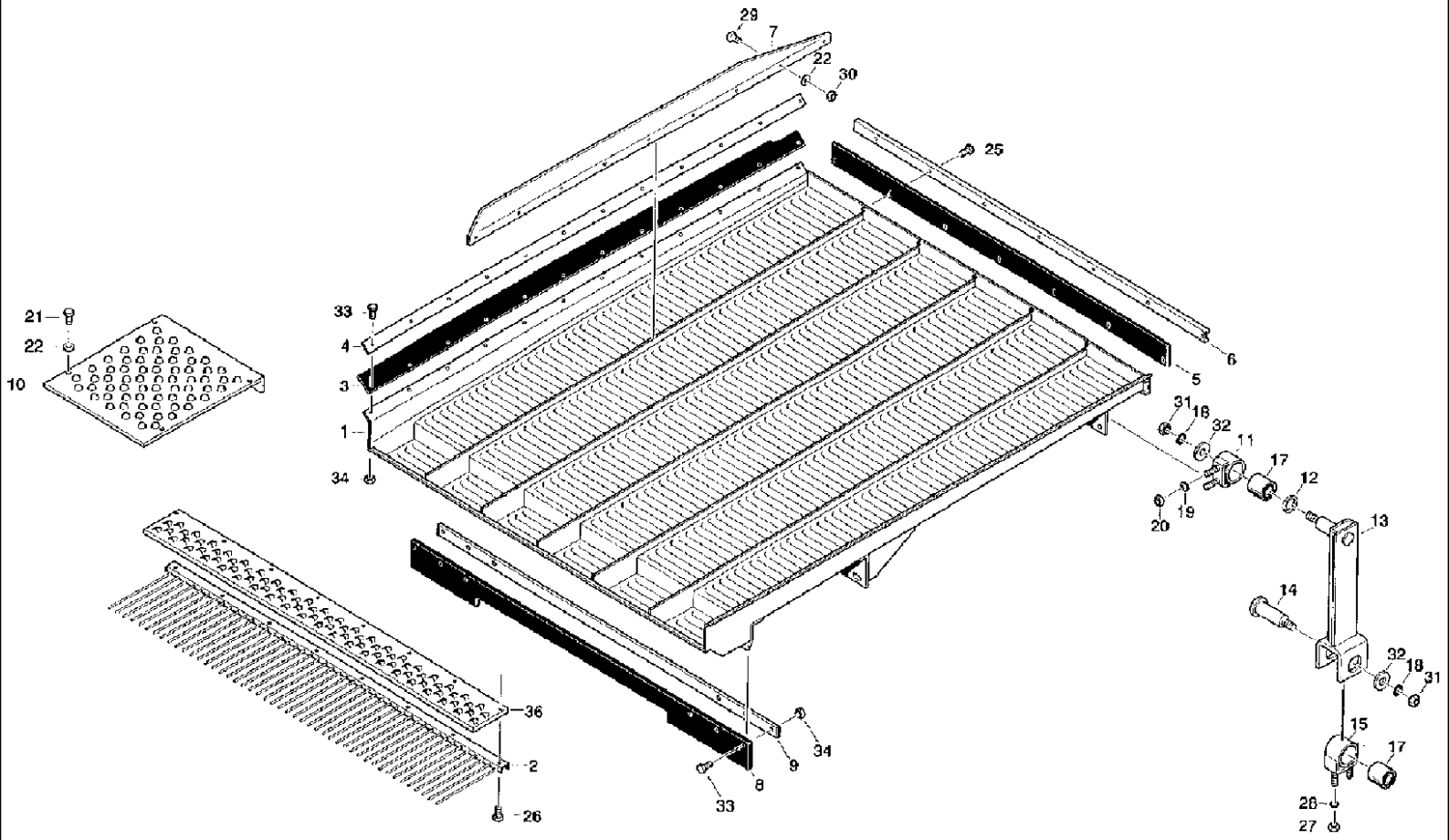

527 CASE IH COMBINE (1/98-12/98)

055 GRAIN PAN

Ref	Part Number	Qty	Description
1	061009603	1	GRAIN PAN,
2	061033363	1	RAKE,
3	061009820	2	GASKET,
4	061009837	2	RAIL,
5	060111112	1	GASKET,
6	060111120	1	RAIL,
7	061009845	5	CATWALK, WEB guiding
8	061009853	2	GASKET,
9	061009861	2	RAIL,
10	061020422	6	SCREEN, SIEVE
11	4247056477	2	HOUSING, BEARING,
12	4240043487	2	RING,
13	4240022425	2	ARM, LEVER rocking
14	4240050638	2	PIN, LARGE, BOLT
15	4240022458	2	BEARING,
17	4240033846	4	BUSHING, SILENT
18	9961924596	4	DISC, NOTCHED, WASHER toothed lock, A16.5
19	9999853166	4	PLATE, LOCKING, WASHER VSF, B10
20	006213935	4	NUT, hex, M10 -8
21	006338385	24	SCREW, hex, M6 x 16 -8.8
22	9999853100	134	PLATE, LOCKING, WASHER, VSF M6
25	9933930001	7	SCREW, hex, M8 x 20 -8.8
26	006267080	8	NUT, hex, M8 -8
27	006214140	4	NUT, hex, M12 -8
28	9961924506	4	DISC, NOTCHED, WASHER toothed lock, A12.5
29	9933929200	55	SCREW, hex, M6 x 12 -8.8
30	006213734	55	NUT, hex, M6 -8
31	9950896841	4	NUT, hex, M16 -8
32	9960962055	4	WASHER,
33	006336736	36	SCREW, hex, M4 x 16 -8.8
34	9950897875	36	NUT, hex, M4, 8
35	9933930001	8	SCREW, hex, M8 x 20 -8.8
36	061065797	1	COVER, PROTECTIVE,

056 CLEANING DRIVE

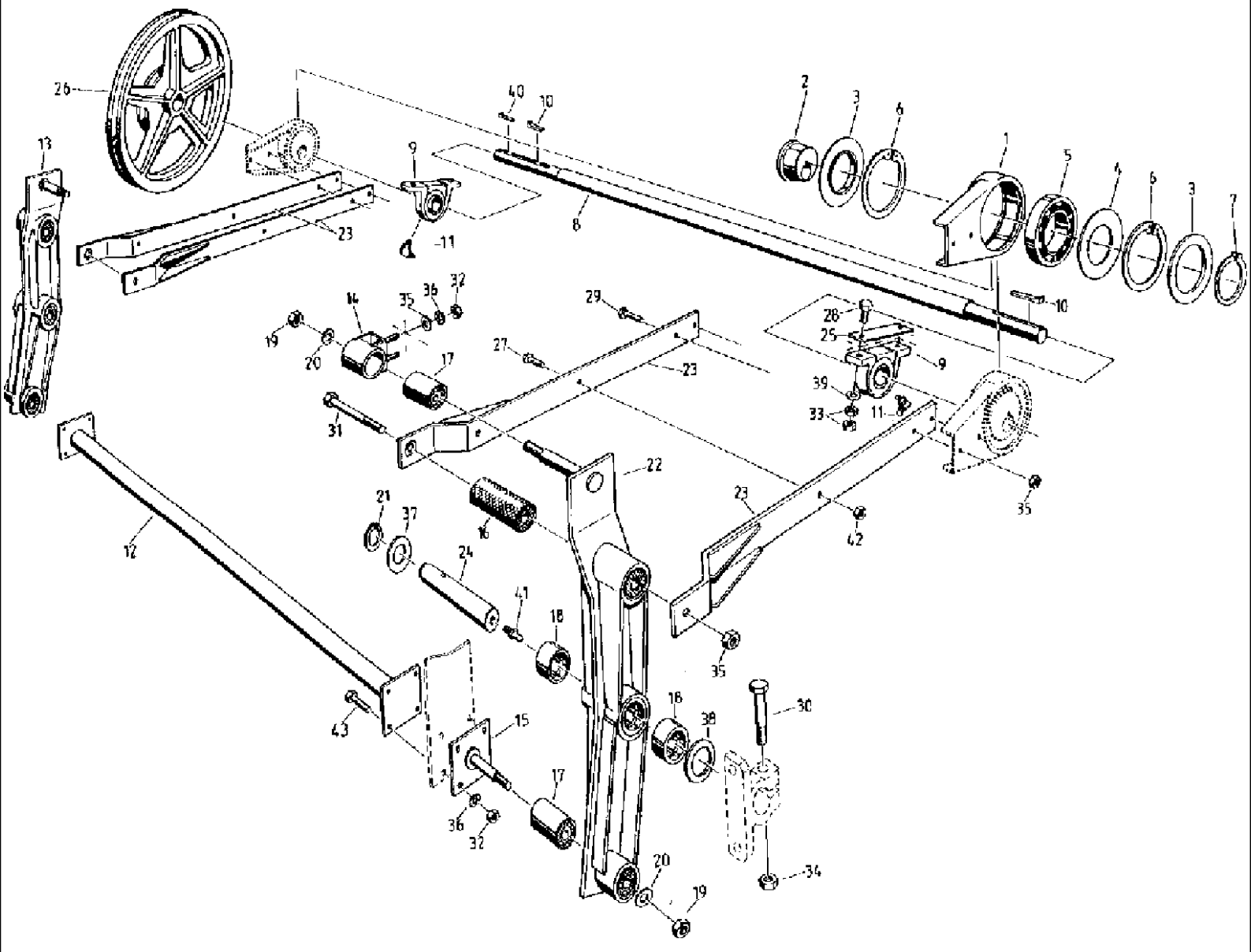

527 CASE IH COMBINE (1/98-12/98)

056 CLEANING DRIVE

Ref	Part Number	Qty	Description
1	4260694111	2	HOUSING, BEARING,
2	4260694128	2	ECCENTRIC,
3	4228671291	4	SPACER,
4	061001758	2	WASHER,
5	060502890	2	BEARING, ball, 6016, 2RS1
6	9964917633	4	CIRCLIP, 125 x 4
7	9964917408	2	CIRCLIP, 80 x 2.5
8	4270720291	1	SHAFT,
9	060518166	2	BEARING, pedestal, SW 40 U
10	9965955373	2	KEY, gib head, 12 x 8 x 50
11	060150801	2	NIPPLE, LUBE, CM10 x 1
12	4247056493	1	CROSSBAR, beam
13	061050091	1	LEVER, left hand
14	4247056460	2	BEARING,
15	4240022386	2	DRIVE DOG,
16	4247055941	2	BUSHING, silent
17	4240033846	4	BUSHING, silent, S23 -0
18	060501350	4	HALF BUSH, sliding, GSM -4550 -50
19	006267152	2	NUT, hex, M16 -8
20	9960922353	4	WASHER, A17
21	060501455	4	CIRCLIP, 45 x 1.75
22	061050106	1	LEVER, right hand
23	4260694152	4	SHIN, STRAP
24	4270720267	2	PIN, LARGE, BOLT
25	4260694240	2	BLOCK,
26	4270720330	1	GROOVED PULLEY, V-BELT
27	9933931123	4	SCREW, hex, M10 x 30 -8.8
28	9931978950	4	SCREW, hex, M14 x 60 -8.8
29	9999850766	4	SCREW, verbus, M16 x 40 -100
30	9932961861	2	SCREW, hex, M16 x 90 -8.8
31	060162524	2	SCREW, hex, M16 x 120 -10.9
32	006213935	12	NUT, hex, M10 -8
33	006215447	8	NUT, hex, M14 -8
34	006267152	2	NUT, hex, M16 -8
35	9999850782	6	NUT, verbus, M16 -10
36	9961924491	12	DISC, NOTCHED, WASHER toothed, A10.5
37	9907919756	4	WASHER,
38	9965964470	4	WASHER,
39	060518125	4	WASHER,
40	003502497	1	KEY, gib head, 12 x 8 x 63
41	003617056	2	NIPPLE, LUBE, AM8 x 1
42	006269000	4	NUT, hex, M10 -8
43	9933931180	8	SCREW, hex, M10 x 35 -8.8

058 CLEANING FAN

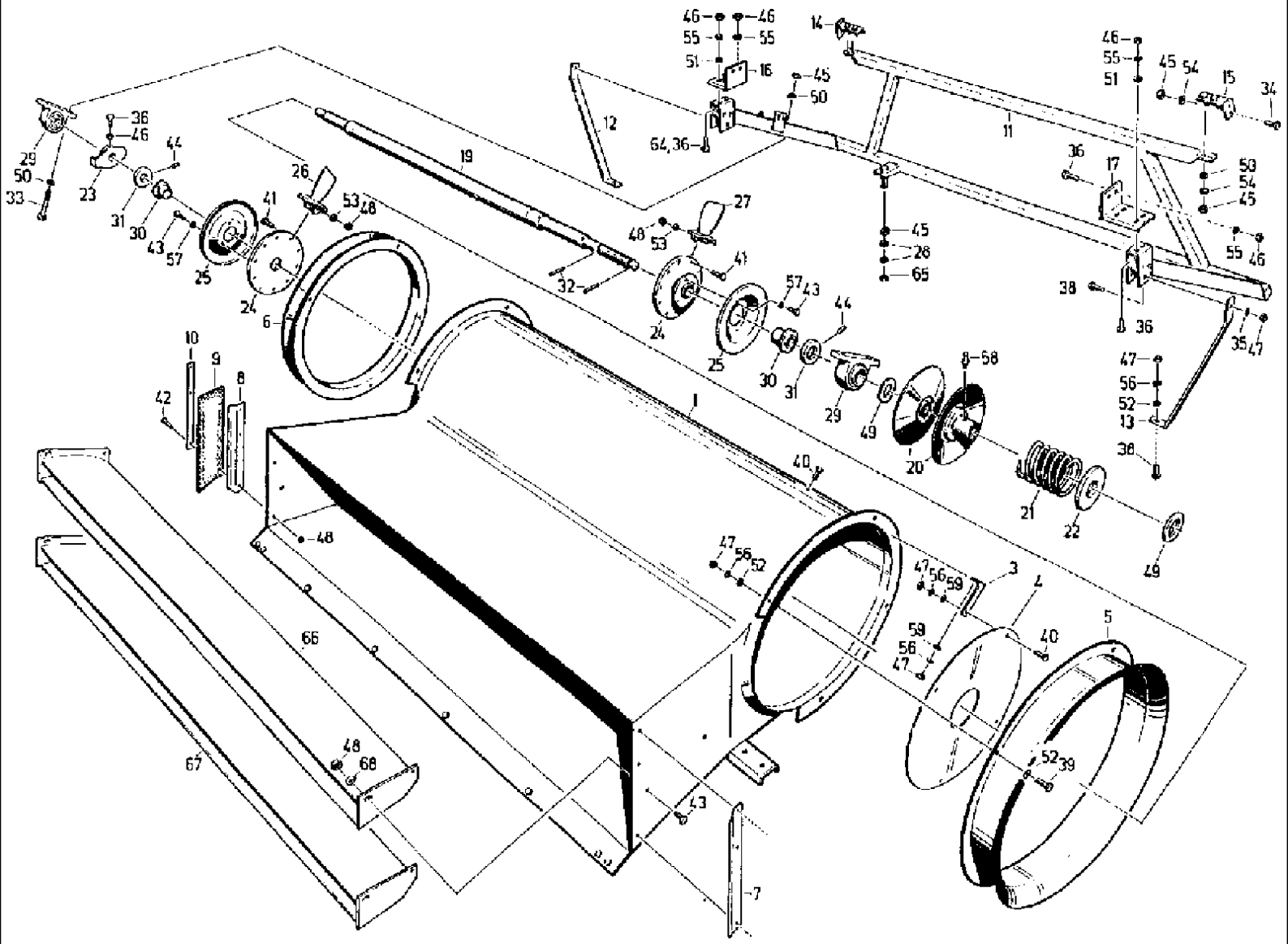

527 CASE IH COMBINE (1/98-12/98)

058 CLEANING FAN

Ref	Part Number	Qty	Description
1	4270720837	1	CASE,
2	4270720798	1	PROFILE, stream
3	4240049476	8	STAY, BRACE
4	4240049468	2	WASHER,
5	4270720886	1	JET, right hand
6	4270720894	1	JET, left hand
7	4270720974	1	ANGLE, right hand
8	4270720982	1	ANGLE, left hand
9	4270720958	2	JOINT, RUBBER, SEAL
10	4270720966	2	RAIL,
11	4270720900	1	FRAME,
12	4270720845	1	SUSPENSION BLOCK, left hand
13	4270720853	1	SUSPENSION BLOCK, right hand
14	4270720925	1	GUIDE, LEVERS, bracket, left hand
15	4270720917	1	GUIDE, LEVERS, bracket, right hand
16	060183047	1	STOP, hand
17	4270720933	1	STOP, right hand
19	4247057871	1	TUBE, SHAFT rotating
20	4240028592	2	HALF-ROLLER, PULLEY
21	4221622796	1	SPRING, COMPRESSION,
22	4240028607	1	CUP, SPRING, retainer
23	4260690181	1	WASHER,
24	4270720804	2	HUB,
25	4270720812	2	COVER,
26	4240053817	10	PADDLE, BLADE, left hand
27	4240053833	10	FIN, BLADE, right hand
28	9999853125	4	PLATE, LOCKING, WASHER, VSF M12
29	060518166	2	BEARING, PEDESTAL, SW 40 U
30	9903948877	2	PIN, ROLL, SLEEVE adapter, H 2310
31	9964918378	2	RING, LOCKING, adjusting, A45
32	9967942246	2	SPLIT PIN/SAFETY PIN, 8 x 55
33	9932932447	4	SCREW, hex, M12 x 90 -8.8
34	9933931863	4	SCREW, hex, M12 x 25 -8.8
35	9999853158	4	PLATE, LOCKING, WASHER, VSF -B8
36	006344037	9	SCREW, hex, M10 x 25 -8.8
38	9933929173	4	SCREW, hex, M8 x 25 -8.8
39	9933930694	8	SCREW, hex, M8 x 20 -8.8
40	006340781	18	SCREW, hex, M8 x 16 -8.8
41	006338713	20	SCREW, hex, M6 x 25 -8.8
42	006338385	6	SCREW, hex, M6 x 16 -8.8
43	9933929200	14	SCREW, hex, M6 x 12 -8.8
44	003782357	2	PIN, BOLT stud, M10 x 12
45	006214140	14	NUT, hex, M12 -8
46	006213935	9	NUT, hex, M10 -8
47	006213830	26	NUT, hex, M8 -8

527 CASE IH COMBINE (1/98-12/98)

058 CLEANING FAN

Ref	Part Number	Qty	Description
48	006267111	34	NUT, hex, M6 -8
49	9965923534	2	WASHER, 42 x 55 x 4
50	9999853125	8	PLATE, LOCKING, WASHER, VSF M12
51	4221620616	4	WASHER, 13
52	9964962783	16	WASHER, B8.4
53	006510228	20	WASHER, B6.4
54	006501557	4	WASHER, SPRING, B12
55	9961924491	12	DISC, NOTCHED, WASHER toothed, A10.5
56	006506264	18	DISC, NOTCHED, WASHER toothed, A8.2
57	9961924957	6	DISC, NOTCHED, WASHER toothed, A6.4
59	9960921633	18	WASHER, A8.4
64	9933931123	2	SCREW, hex, M10 x 30 -8.8
65	006267177	2	NUT, hex, M12, SW, 18 -8
66	060204318	1	HOLDER, PROFILE stream
67	060204350	1	HOLDER, PROFILE stream
68	9999853100	8	PLATE, LOCKING, WASHER, VSF M6

060 DISTRIBUTOR AUGER, SLOPE

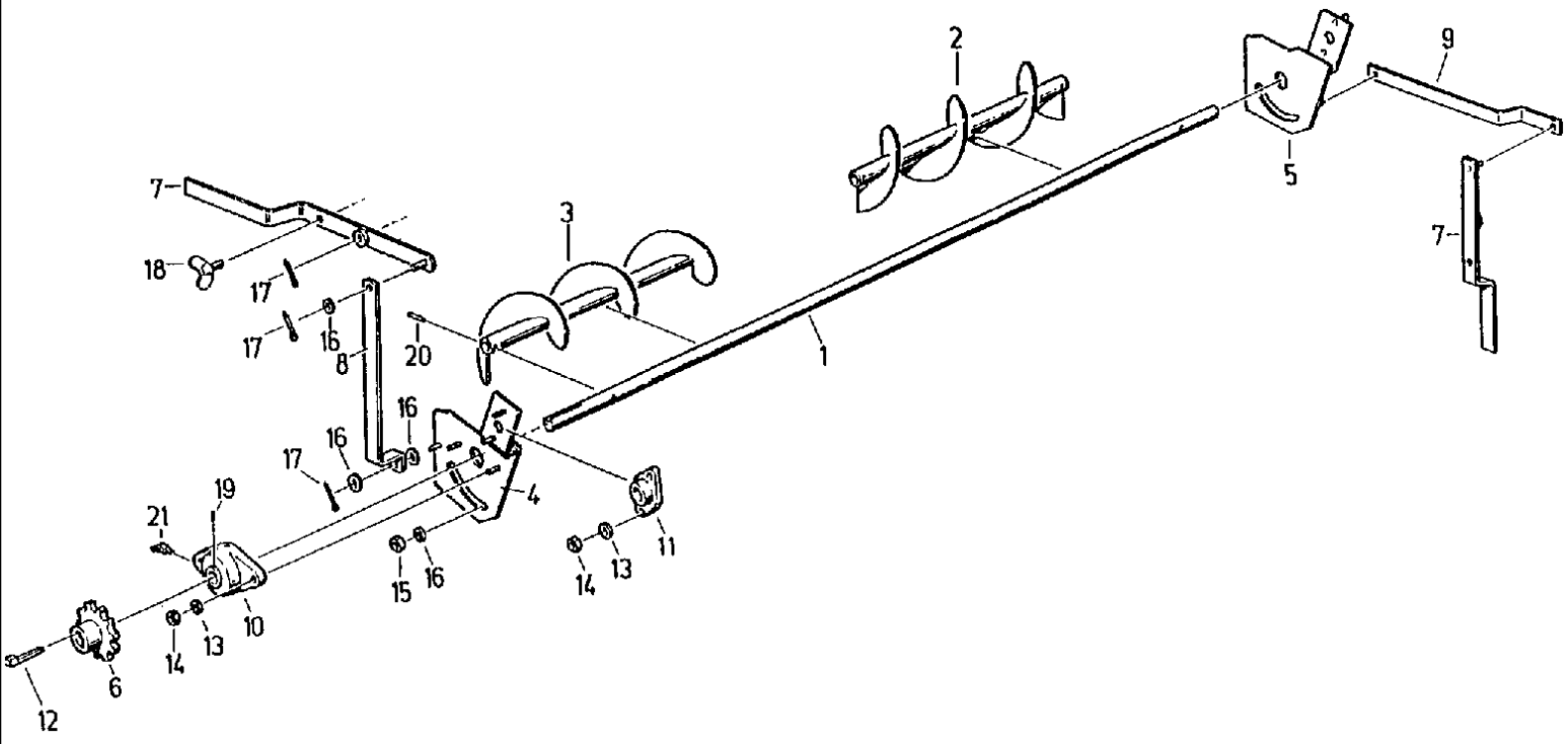

527 CASE IH COMBINE (1/98-12/98)

060 DISTRIBUTOR AUGER, SLOPE

Ref	Part Number	Qty	Description
1	061011583	1	SHAFT,
2	060171228	1	WORM,
3	060171260	1	WORM,
4	061011446	1	PLATE, PIVOT, bearing, left hand
5	061011470	1	PLATE, PIVOT, bearing, right hand
6	060171365	1	DRIVE SPROCKET,
7	061011550	2	LEVER, regulating
8	061011534	1	ROD, draw, left hand
9	061011542	1	ROD, draw, right hand
10	060500366	2	CARRIER, BEARING, FLANGE, OFW 25 U
11	060502681	2	CARRIER, BEARING, FLANGE
12	9965955228	1	KEY, gib head, 8 x 7 x 56
13	9999853094	8	PLATE, LOCKING, WASHER, VSF M10
14	006213935	8	NUT, hex, M10 -8
15	006269000	2	NUT, hex, M10 -SW16 -8
16	9960921787	10	WASHER, A10.5
17	9963949762	6	PIN, SPLIT (COTTER), 3.2 x 16
18	006026321	2	THUMB SCREW, wing, M10 x 20
19	9947940303	2	PIN, PLUG thread, M6 x 8, -14H
20	060500358	2	SPLIT PIN/SAFETY PIN, 8 x 36
21	9920925515	1	NIPPLE, LUBE, B M 8 x 1

061 GRAIN AND EAR AUGER

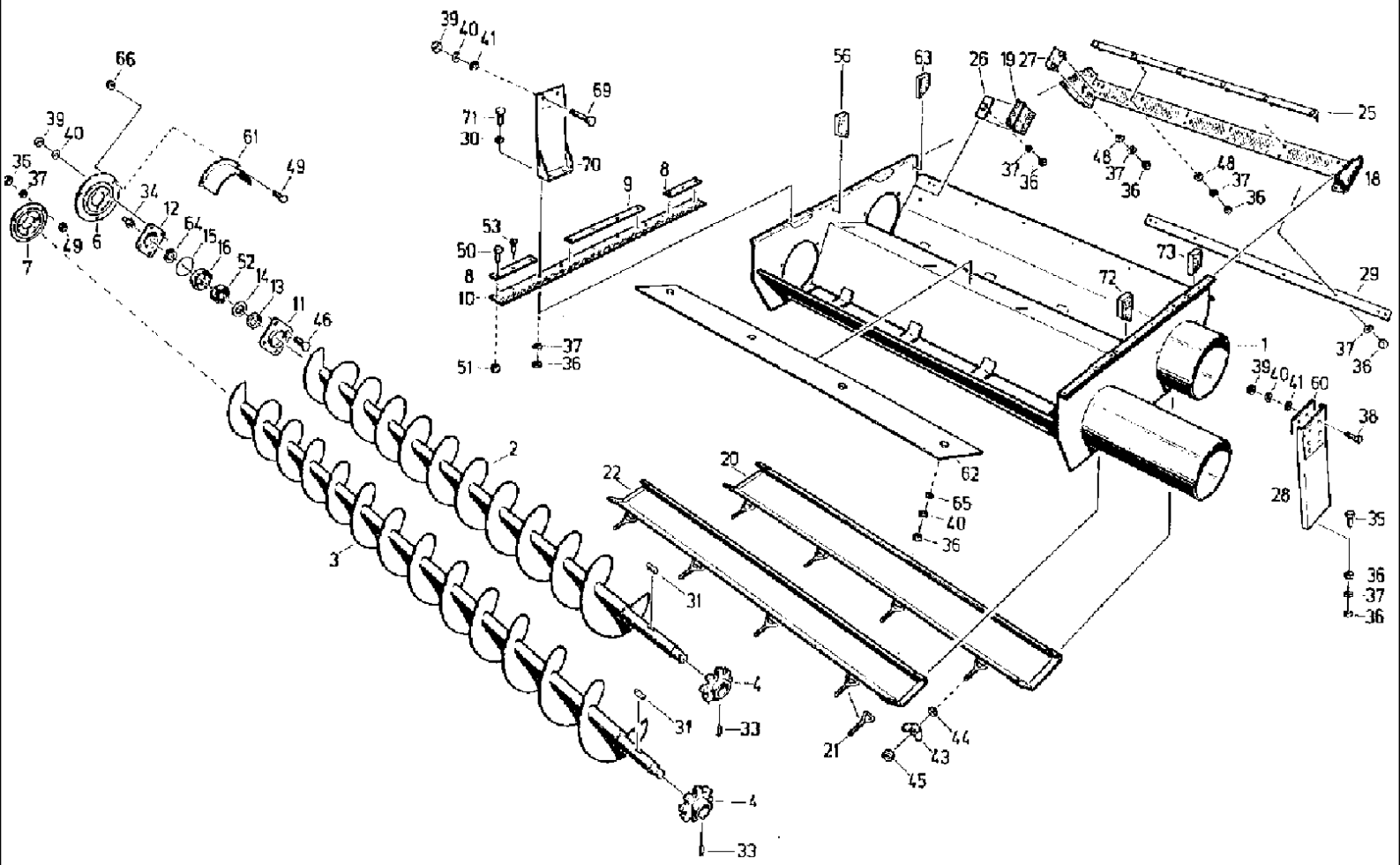

527 CASE IH COMBINE (1/98-12/98)

061 GRAIN AND EAR AUGER

Ref	Part Number	Qty	Description
1	4270720162	1	CASE,
2	4270720170	1	WORM,
3	060196357	1	WORM,
4	4240058854	2	DRIVE SPROCKET,
6	4260694474	1	COVER,
7	4260694482	1	COVER,
8	4260694490	4	RAIL,
9	4260694505	2	RAIL,
10	4260694513	2	GASKET,
11	4260689122	2	BEARING LINER, shell
12	4260689130	2	BEARING LINER, shell
13	4221623104	2	GASKET,
14	4110088233	2	SEAL WASHER,
15	4260694562	2	O-RING,
16	4221623073	2	BUSHING, LARGE, RING
18	4270720146	1	SEAL, packing
19	4260694538	2	PROFILE, PIECE sectional
20	4270720195	1	FLAP, grain
20	061038191	1	FLAP, grain, ш 3 mm
21	4221623274	8	DRAW HOOK, tow
22	4270720201	1	PLATE, LARGE, FLAP ear
25	4270720218	1	REINFORCEMENT,
26	4260694466	2	STIFFENER, reinforcement
27	4270720226	2	RAIL,
28	060195686	2	SUSPENSION BLOCK,
29	4270720138	1	REINFORCEMENT,
30	4221620616	8	WASHER,
31	9965956413	2	KEY, BUCKET TOOTHRT, FITTING, A10 x 8 x 36
33	9947940360	2	PIN, SCREW set, M8 x 16, 45H
34	003617056	2	NIPPLE, LUBE, AM8 x 1
35	9933930001	4	SCREW, hex, M8 x 20 -8.8
36	006213830	32	NUT, hex, M8 -8
37	9961920061	32	WASHER, SPRING, B8
38	9933931228	4	SCREW, hex, M10 x 40 -8.8
39	006213935	24	NUT, hex, M10 -8
40	9961920004	24	WASHER, SPRING, B10
41	9965963638	8	WASHER, 11 x 32 x 3
43	9951893782	8	NUT, WING, M6
44	006510927	8	WASHER, A6.4
45	006267111	8	NUT, hex, M6 -8
46	9933929065	8	SCREW, hex, M10 x 20 -8.8
48	9964962783	10	WASHER, B8.4
49	006340781	8	SCREW, hex, M8 x 16 -8.8
50	9933959737	20	SCREW, hex, M4 x 12 -8.8
51	9950897875	20	NUT, hex, M4, 8

061 GRAIN AND EAR AUGER

Ref	Part Number	Qty	Description
52	9902890433	2	BEARING, ball, 6205
53	9971899315	20	RIVET, flat head, 4.0 x 16.7
56	061050854	1	GASKET,
60	060183996	2	BLOCK,
61	4260708867	2	COVER, PROTECTIVE,
62	4270720234	1	SPOOL, slide
63	060203487	1	GASKET,
64	9964917192	2	CIRCLIP, RING safety, 25 x 1.2
65	9961921970	4	WASHER, R11
66	003792053	4	NUT, hex, VM8- 8
69	9933931123	4	SCREW, hex, M10 x 30 -8.8
70	060196453	2	SUSPENSION BLOCK,
71	9933929173	4	SCREW, hex, M8 x 25 -8.8
72	061050862	1	GASKET,
73	060203495	1	GASKET,

063 EAR ELEVATOR

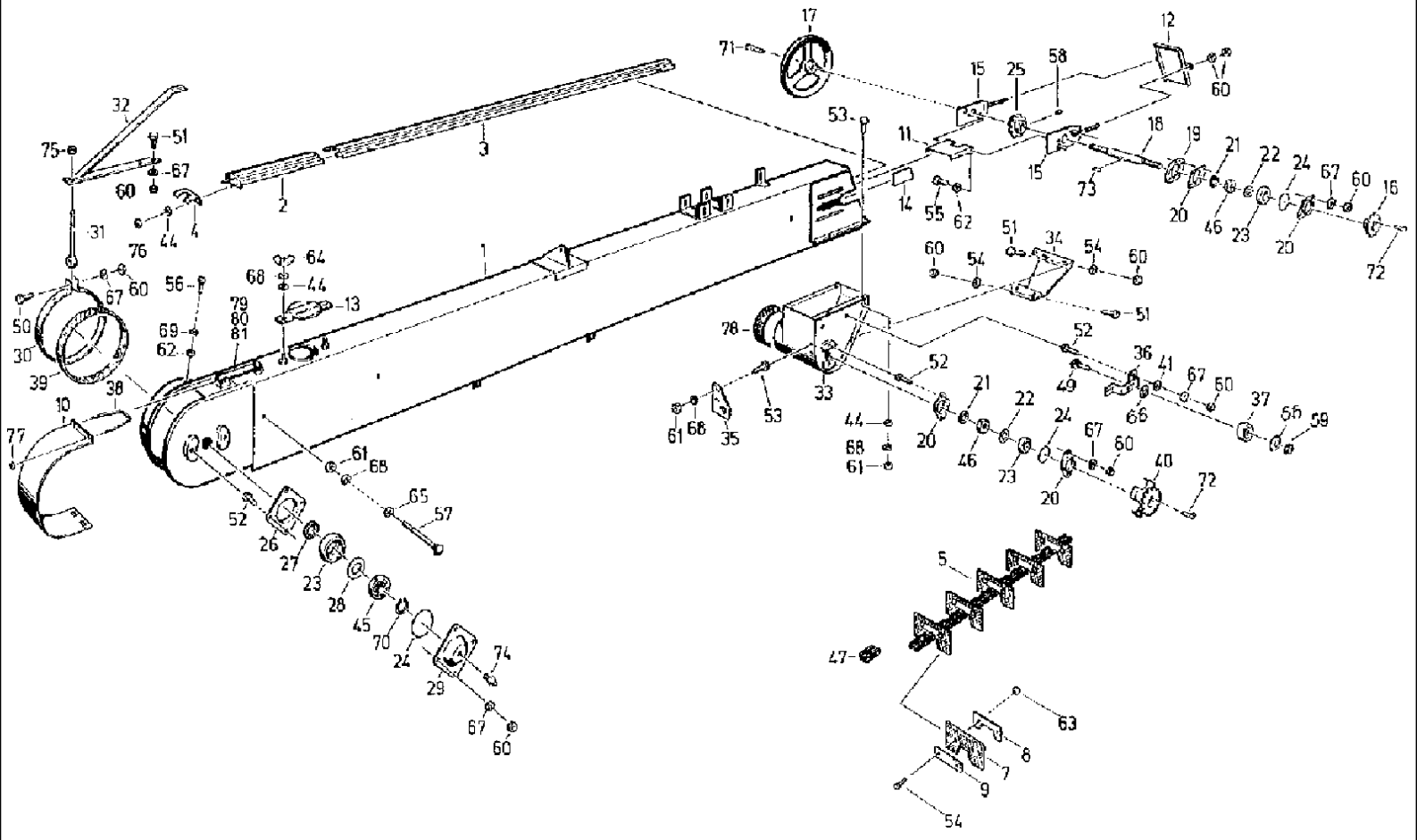

527 CASE IH COMBINE (1/98-12/98)

063 EAR ELEVATOR

Ref	Part Number	Qty	Description
1	4270722687	1	CAGE, channel
2	4260711524	1	RAIL, guide
3	4260711532	1	RAIL, guide
4	4260711540	1	GUIDE,
5	4221624693	1	CHAIN, ELEVATOR,
7	4221624708	36	DRIVE DOG,
8	4221624724	36	BLOCK,
9	4260711284	36	BLOCK,
10	4260711766	1	FLAP,
10	060201235	1	FLAP, ш 3 mm
11	4221624580	1	PLATE, LARGE, HEAD rail
12	4260694964	1	COVER,
13	4260688958	1	COVER,
14	4221623973	2	COVER, PROTECTIVE,
15	4260694997	2	SPOOL, valve
16	060168257	1	PINION, SPOCKET, 15Z
17	4260695008	1	GROOVED PULLEY, V-BELT
18	060168304	1	SHAFT, DRIVE,
19	4260712718	2	SPACER,
20	4221623032	6	BEARING LINER, SHELL
21	4260707866	3	GASKET, RING
22	4110088233	3	SEAL WASHER,
23	4221623073	4	BUSHING, LARGE, RING
24	4260694562	4	O-RING,
25	4221623370	1	DRIVE SPROCKET, 15Z
26	4260689122	1	BEARING LINER, SHELL
27	4221624170	1	GASKET, RING
28	4221624162	1	SEAL WASHER,
29	4260689130	1	BEARING LINER, SHELL
30	4221625452	1	CLAMP,
31	4221625428	1	HOOK, CAPSTAN
32	4260713663	1	SUPPORT, holder
33	4260694980	1	KNOCKER, spout
34	060168441	1	SHEET, support
35	060168337	1	RETAINER,
36	060168281	1	BOW,
37	4221625725	1	TENSIONER, BLOCK fastening
38	4260711315	1	BOW,
39	4221624017	1	GASKET,
40	060168240	1	SPROCKET ASSY., 15Z
41	4221620616	2	WASHER,
44	4260689114	8	WASHER,
45	9902890433	1	BEARING, ball, 6205
46	9902890458	3	BEARING, ball, 6205, 2RS
47	003782500	1	LINK, CHAIN, stab, 41.4

527 CASE IH COMBINE (1/98-12/98)

063 EAR ELEVATOR

Ref	Part Number	Qty	Description
49	9932932334	1	SCREW, hex, M12 x 65 -8.8
50	9933931123	1	SCREW, hex, M10 x 30 -8.8
51	006344037	7	SCREW, hex, M10 x 25 -8.8
52	9933929065	8	SCREW, hex, M10 x 20 -8.8
53	006340781	6	SCREW, hex, M8 x 16 -8.8
54	9999853166	4	PLATE, LOCKING, WASHER, VSF -B10
55	006338713	74	SCREW, hex, M6 x 25 -8.8
56	006338385	1	SCREW, hex, M6 x 16 -8.8
57	9945926243	4	SCREW, round head, M8 x 140, 4.6
58	060512378	1	PIN, SCREW set, M8 x 16, 45H
59	006214140	1	NUT, hex, M12 -8
60	006213935	22	NUT, hex, M10 -8
61	006213830	10	NUT, hex, M8 -8
62	006213734	3	NUT, hex, M6 -8
63	003794096	72	NUT, hex, M6 -6
64	9951893790	2	NUT, WING, M8
65	9964962783	4	WASHER, B8.4
66	9999853125	2	PLATE, LOCKING, WASHER spring, B12
67	9961920004	14	WASHER, SPRING, B10
68	9961920061	12	WASHER, SPRING, B8
69	9961919927	1	WASHER, SPRING, B6
70	9964917192	1	CIRCLIP, 25 x 1.2
71	9965955340	1	KEY, gib head, 8 x 7 x 36
72	9965955332	2	KEY, gib head, 8 x 7 x 32
73	9965956132	1	KEY, BUCKET TOOTHRT, FITTING, A8 x 7 x 36
74	003617056	1	NIPPLE, LUBE, AM8 x 1
75	006269000	1	NUT, hex, M10 -8
76	9999851068	2	NUT, verbus, M8 -10
77	006267080	1	NUT, hex, M8 -8
78	060182800	1	GASKET,
79	4260714744	1	LEVER, ASSY AND KNOB, spring
80	003783286	2	RIVET, blind, A4 x 6
81	4260714744	1	LEVER, ASSY AND KNOB, hand

065 UPPER EAR AUGER

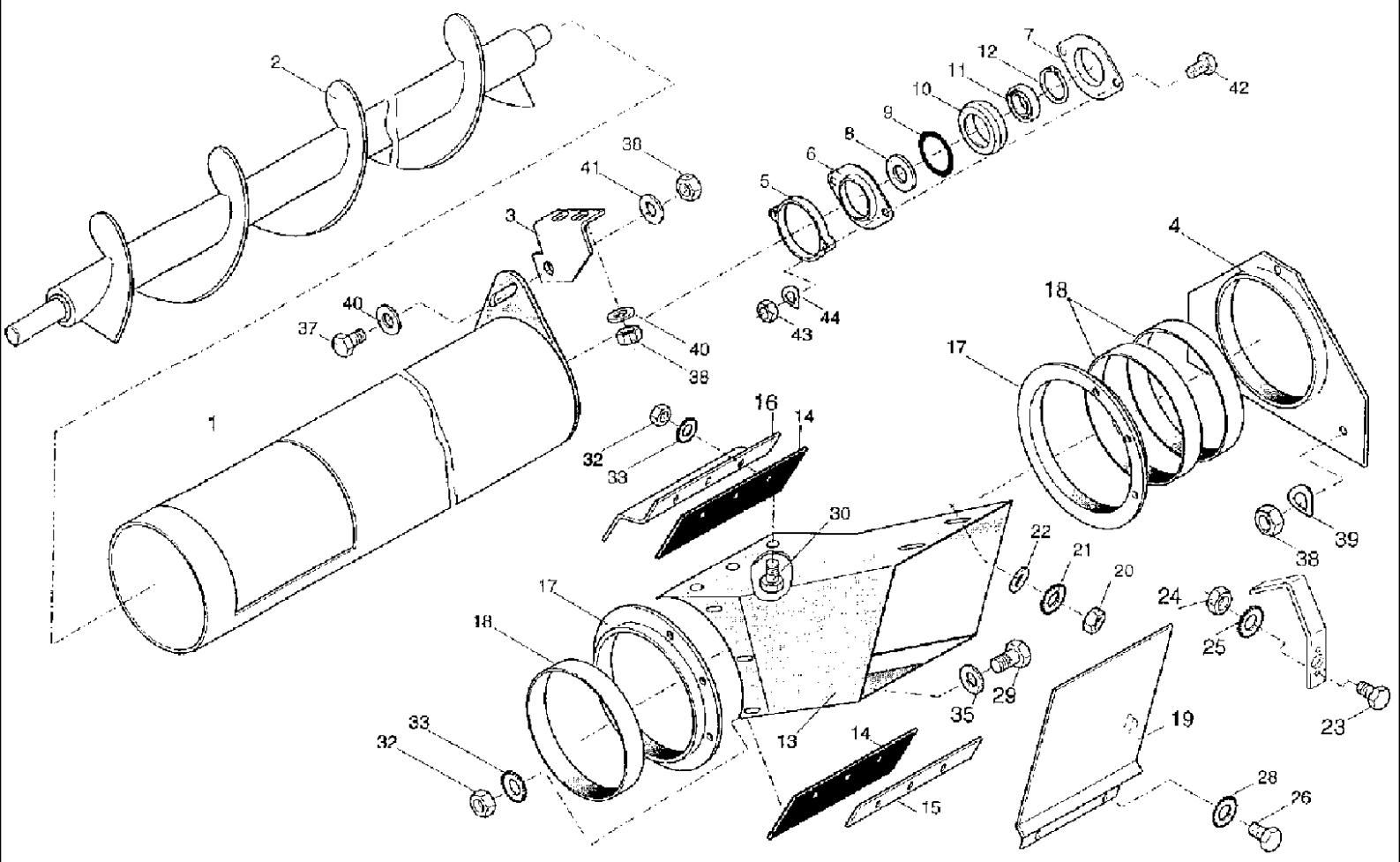

527 CASE IH COMBINE (1/98-12/98)

065 UPPER EAR AUGER

Ref	Part Number	Qty	Description
1	061017314	1	TUBE, AUGER
2	061017330	1	WORM, AUGER ear
3	4260695032	1	ANGLE BAR,
4	4260695040	1	FLANGE ASSY, PIPE
5	4260712718	1	SPACER,
6	4221623032	1	BEARING LINER, SHELL
7	4221623040	1	BEARING LINER, SHELL
8	4260689001	1	GASKET, RING
9	4260694562	1	O-RING,
10	4221623073	1	BUSHING, LARGE,
11	9902890441	1	BEARING, ball, 6205RS
12	9964917192	1	CIRCLIP, 25 x 1.2
13	061022424	1	CASE,
14	060029858	2	JOINT, RUBBER, sel
15	060029866	1	DISC, rail
16	061023730	1	HOLDER, rail
17	061022504	2	RING, PIPE
18	060182800	3	GASKET, RING
19	061022682	1	FLAP,
20	006213734	2	NUT, hex, M6 -8
21	9961924957	2	DISC, NOTCHED, WASHER toothed, A6.4
22	006510927	2	WASHER, A6.4
23	9933929008	2	SCREW, hex, M5 x 16, 8.8
24	006213478	2	NUT, hex, M5 -8
25	060503545	2	DISC, NOTCHED, WASHER toothed, A5.3
26	9933928980	2	SCREW, hex, M5 x 12 -8.8
28	9961963352	2	DISC, NOTCHED, WASHER toothed, A5.1
29	9933929651	4	SCREW, hex, M6 x 14 -8.8
30	006338385	6	SCREW, hex, M6 x 16 -8.8
32	006213734	10	NUT, hex, M6 -8
33	9961924957	14	DISC, NOTCHED, WASHER toothed, A6.4
35	006510927	4	WASHER, A6.4
37	9933930001	1	SCREW, hex, M8 x 20 -8.8
38	006213830	6	NUT, hex, M8 -8
39	9961920061	3	WASHER, SPRING, B8
40	9960921633	3	WASHER, A8.4
41	9964962783	1	WASHER, A8.4
42	9933931123	2	SCREW, hex, M10 x 30 -8.8
43	006213935	2	NUT, hex, M10 -8
44	9961920004	2	WASHER, SPRING, B10

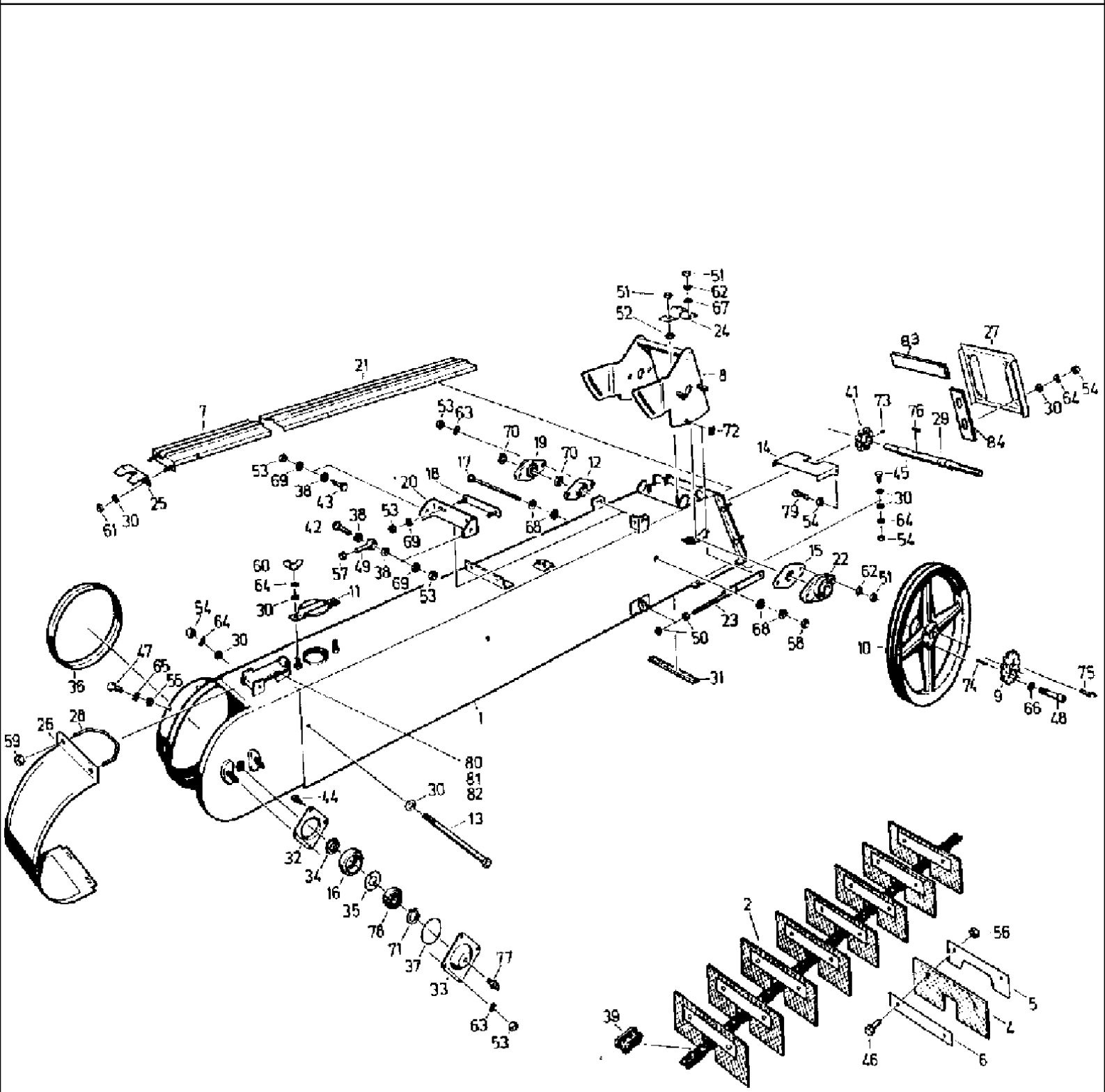
51
62
67
52
24
8
21
7
25
61
30
53
63
70
19
12
17
18
20
72
14
41
73
76
29
27
83
84
64
54
45
79
42
38
43
69
57
49
60
64
11
15
22
23
50
31
68
58
10
74
9
66
48
75
36
47
65
55
54
26
28
59
80
81
82
44
32
34
16
35
78
71
37
33
77
39
2
56
5
4
6
46

527 CASE IH COMBINE (1/98-12/98)

067 GRAIN ELEVATOR

Ref	Part Number	Qty	Description
1	4270721790	1	CASE,
2	061002500	1	CHAIN, ELEVATOR, 100GI
4	061002525	25	DRIVE DOG,
5	061002533	25	BLOCK,
6	4260711284	25	BLOCK,
7	4270721813	1	RAIL, guide
8	061025958	1	IDLER, FRONT, TENSIONER chain
9	4270722010	1	SLEWING RING, RIM toothed
10	4270722027	1	GROOVED PULLEY, V-BELT
11	4260688958	1	COVER,
12	061002613	1	GASKET, packing, left hand
13	4270721846	3	SCREW,
14	061025941	1	PLATE, LARGE, HEAD rail
15	061002621	1	GASKET, packing, right hand
16	4221623073	1	BUSHING, LARGE, RING
17	4270721862	1	SCREW, tension
18	061002670	1	CROSSBAR, web
19	061002566	1	BEARING, left hand
20	4270721782	1	SUPPORT, MOUNT
21	4270721887	1	RAIL, guiding
22	061002558	1	BEARING, right hand
23	4270721895	1	ROD, ADJUSTMENT, SPINDLE adjusting
24	060113155	2	SHIN, STRAP
25	4270721774	1	GUIDE,
26	4270721838	1	FLAP, o
26	061038214	1	FLAP, 3 mm
27	061023185	1	COVER,
28	4260711315	1	BOW,
29	061002695	1	SHAFT, DRIVE,
30	4260689114	20	WASHER,
31	4270722494	1	STRIP, SEALING, PACKING
32	4260689122	1	BEARING LINER, SHELL
33	4260689130	1	BEARING LINER, SHELL
34	4260688990	1	SEAL WASHER,
35	4260689001	1	GASKET,
36	4240050156	1	GASKET,
37	4260694562	1	O-RING, round
38	4221620616	3	WASHER,
39	003782500	AR	LINK, CHAIN, connector, n.B.
41	4240058854	1	DRIVE SPROCKET,
42	9933931308	1	SCREW, hex, M10 x 45 -8.8
43	006344037	1	SCREW, hex, M10 x 25 -8.8
44	9933930887	4	SCREW, hex, M10 x 16 -8.8
45	9933929715	3	SCREW, hex, M8 x 18 -8.8
46	006338713	52	SCREW, hex, M6 x 25 -8.8

527 CASE IH COMBINE (1/98-12/98)

067 GRAIN ELEVATOR

Ref	Part Number	Qty	Description
47	006338385	1	SCREW, hex, M6 x 16 -8.8
48	9936984864	4	SCREW, cheese head, M8 x 55 -10.9
49	003792535	1	SCREW, EYEBOLT, LAM 12 x 70 -5.6
50	9950896841	2	NUT, hex, M16 -8
51	006214140	6	NUT, hex, M12 -8
52	9950896624	2	NUT, hex, M12 -04
53	006213935	10	NUT, hex, M10 -8
54	006213830	12	NUT, hex, M8 -8
55	006213734	1	NUT, hex, M6 -8
56	003794096	50	NUT, hex, VM6 -8
57	006267177	1	NUT, hex, M12, SW18 -8
58	006269000	1	NUT, hex, M10, SW16 -8
59	006267080	2	NUT, hex, M8 -8
60	9951893790	2	NUT, WING, M8
61	9999851068	2	NUT, verbus ripp, M8, 10W
62	006501557	4	WASHER, SPRING, B12
63	9961920004	6	WASHER, SPRING, B10
64	9961920061	12	WASHER, SPRING, B8
65	9961919927	1	WASHER, SPRING, B6
66	9961910976	4	SPRING, WASHER lock, B8
67	9960921988	2	WASHER, A13
68	9965919353	4	WASHER, 11 x 32 x 4
69	9999853166	4	PLATE, LOCKING, WASHER, VSF B10
70	9964917215	2	CIRCLIP, 30 x 1.5
71	9964917192	1	CIRCLIP, 25 x 1.2
72	060516076	1	NUT, hex, M10-8
73	9947940360	10	PIN, SCREW set, M8 x 12
74	9967941807	2	PIN, grooved, 8 x 20
75	9965955285	1	KEY, gib head, 10 x 8 x 50
76	9965956413	1	KEY, BUCKET TOOTHRT, fitting, 10 x 8 x 36
77	003617056	1	NIPPLE, LUBE, AM8 x 1
78	9902890433	1	BEARING, ball, 6205
79	9937938511	2	SCREW, CYLINDER, M8 x 35, -8.8
80	4260714752	1	SPRING,
81	003783286	2	RIVET, blind
82	4260714744	1	LEVER, ASSY AND KNOB, hand
83	061068718	2	GASKET,
84	061068726	2	GASKET,

070 GRAIN TANK

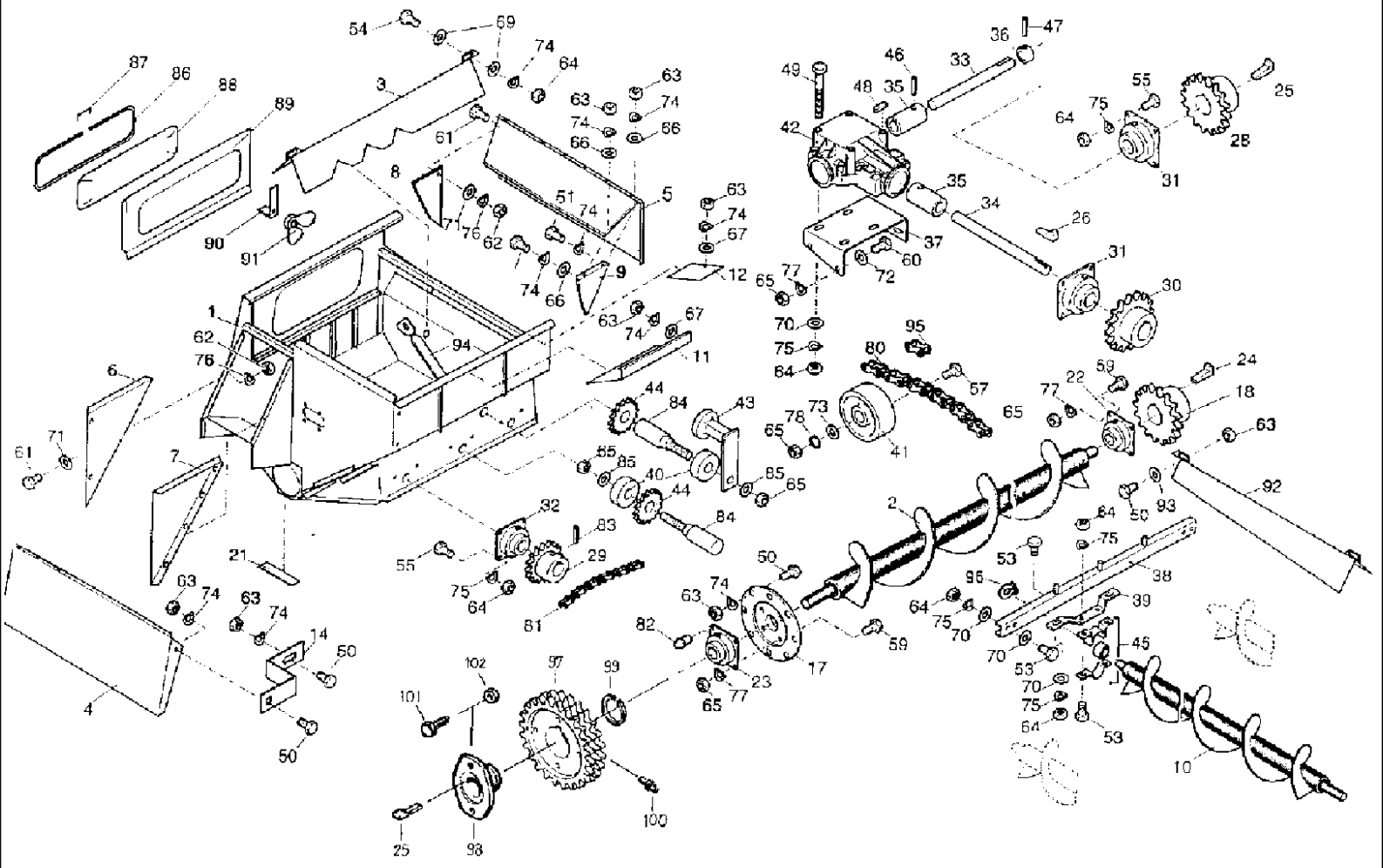

527 CASE IH COMBINE (1/98-12/98)

070 GRAIN TANK

Ref	Part Number	Qty	Description
1	061018210	1	CASE,
2	061012777	1	WORM, AUGER unloader
3	061012808	1	ROOF,
4	061032153	1	SIDE-PLATE, wall, left hand
5	061019775	1	SIDE-PLATE, wall, right hand
6	061019847	1	BIT, corner, left hand
7	061019855	1	BIT, corner, left hand
8	061019814	1	PROTECTION PLATE, corner, right hand
9	061019822	1	BIT, corner
10	061012920	3	WORM,
11	061019726	1	COVER,
12	4270718416	1	COVER,
14	061024555	1	SUPPORT,
17	4260692087	1	FLANGE,
18	061012978	1	CHAIN (AGRICULTURE), sprocket, 15Z
20	4260692046	1	DRIVE SPROCKET, double
21	4240024242	2	SEAL,
22	060500696	1	CARRIER, BEARING, FLANGE, FWS, 40, U
23	060502938	1	CARRIER, BEARING, FLANGE, FWS, 35, U
24	003502497	1	KEY, gib head, 12 x 8 x 63
25	9965955316	2	KEY, gib head, 10 x 8 x 63
26	9965955211	1	KEY, gib head, 8 x 7 x 50
27	4270718457	1	DRIVE SPROCKET, 21Z
28	061013005	1	CHAIN (AGRICULTURE), 25Z
29	061013021	3	CHAIN (AGRICULTURE), 15Z
30	061013054	1	DRIVE SPROCKET, 21Z
31	9902888287	2	CARRIER, BEARING, FLANGE, FWS, 30, U
32	060500688	3	CARRIER, BEARING, FLANGE, FWS, 25, U
33	061012318	1	SHAFT,
34	061012326	1	SHAFT,
35	061012334	2	CLUTCH,
36	4240029183	1	RING, LOCKING, adjusting
37	061012350	1	BRACKET, console
38	061021070	1	BRIDGE,
39	061012422	3	BOW,
40	061013070	3	SPACER, DISK
41	4221625725	1	TENSIONER, BLOCK
42	060503168	1	GEAR, DRIVE angle
43	060500710	1	TENSIONER,
44	060503022	3	IDLER, FRONT, TENSIONER chain
45	060500702	3	CAP CYLINDER END, BLOCK pillow, BS, 25, U
46	060502946	2	SPLIT PIN/SAFETY PIN, BRACE, 8 x 60
47	060502954	1	SPLIT PIN/SAFETY PIN, BRACE, 8 x 30
48	9965956132	2	KEY, BUCKET TOOTHRT, feather, A8 x 7 x 36
49	9932978548	4	SCREW, hex, M10 x 140 -8.8

527 CASE IH COMBINE (1/98-12/98)

070 GRAIN TANK

Ref	Part Number	Qty	Description
50	9933930001	27	SCREW, hex, M8 x 20 -8.8
51	006340781	4	SCREW, hex, M8 x 16 -8.8
52	9933929065	15	SCREW, hex, M10 x 20 -8.8
53	006344037	16	SCREW, hex, M10 x 25 -8.8
54	9933931123	8	SCREW, hex, M10 x 30 -8.8
55	9933931180	20	SCREW, hex, M10 x 35 -8.8
56	9932931550	1	SCREW, hex, M10 x 100 -8.8
57	9932932334	1	SCREW, hex, M12 x 65 -8.8
59	9933932028	8	SCREW, hex, M12 x 35 -8.8
60	9933931863	4	SCREW, hex, M12 x 25 -8.8
61	9933929651	20	SCREW, hex, M6 x 14 -8.8
62	006213734	20	NUT, hex, M6 -8
63	006213830	35	NUT, hex, M8 -8
64	006213935	58	NUT, hex, M10 -8
65	006214140	16	NUT, hex, M12 -8
66	9961921673	25	WASHER, hex, R9
67	9964962783	11	WASHER, hex, A8.4
69	9964962486	20	WASHER, hex, A10.5
70	4221620616	18	WASHER, hex,
71	006510228	40	WASHER, hex, B6.4
72	4250132814	2	WASHER, hex
73	9960921988	1	WASHER, hex, A13
74	9961920061	29	WASHER, SPRING, B8
75	9961920004	58	WASHER, SPRING, B10
76	9961919927	20	WASHER, SPRING, B6
77	9999853174	12	PLATE, LOCKING, washer, VSF B12
78	9961911204	1	WASHER, LOCK, spring, B12
79	9961911085	4	WASHER, LOCK, spring, B10
80	060502970	1	CHAIN (AGRICULTURE), roll, 12B, 1 x 70, E
81	060503006	1	CHAIN (AGRICULTURE), roll, 12B, 1 x 150, E
82	9920925492	8	NIPPLE, LUBE, AM8 x 1
83	9967942238	3	SPLIT PIN/SAFETY PIN, brace, 8 x 50
84	061021126	3	PIN, PIVOT, BOLT bearing
85	9999853174	3	PLATE, LOCKING, WASHER, VSF B12
86	4254135557	1	BUFFER, RUBBER,
87	4228666366	1	CLASP,
88	4240044350	1	GLASS, CAB, WINDOW rear
89	061021503	1	FRAME, WINDOW,
90	4221602776	3	CLAMP,
91	9951893790	3	NUT, WING, thumb, M8
92	061021095	3	ROOF,
93	9999853117	6	PLATE, LOCKING, WASHER, VSF M8
94	061022754	2	SUPPORT,
95	006804056	2	LINK, CHAIN, outer
96	9964917192	3	CIRCLIP, 25 x 1.2

070 GRAIN TANK

Ref	Part Number	Qty	Description
97	061050163	1	GEAR-SET, wheelset
98	061050130	1	CLUTCH,
99	9964917360	1	CIRCLIP, 65 x 2.5
100	9920925492	2	NIPPLE, LUBE,
101	9932930613	1	SCREW, hex, M8 x 40 -8.8
102	006267080	1	NUT, hex, M8-8

073 TANK FILLING AUGER

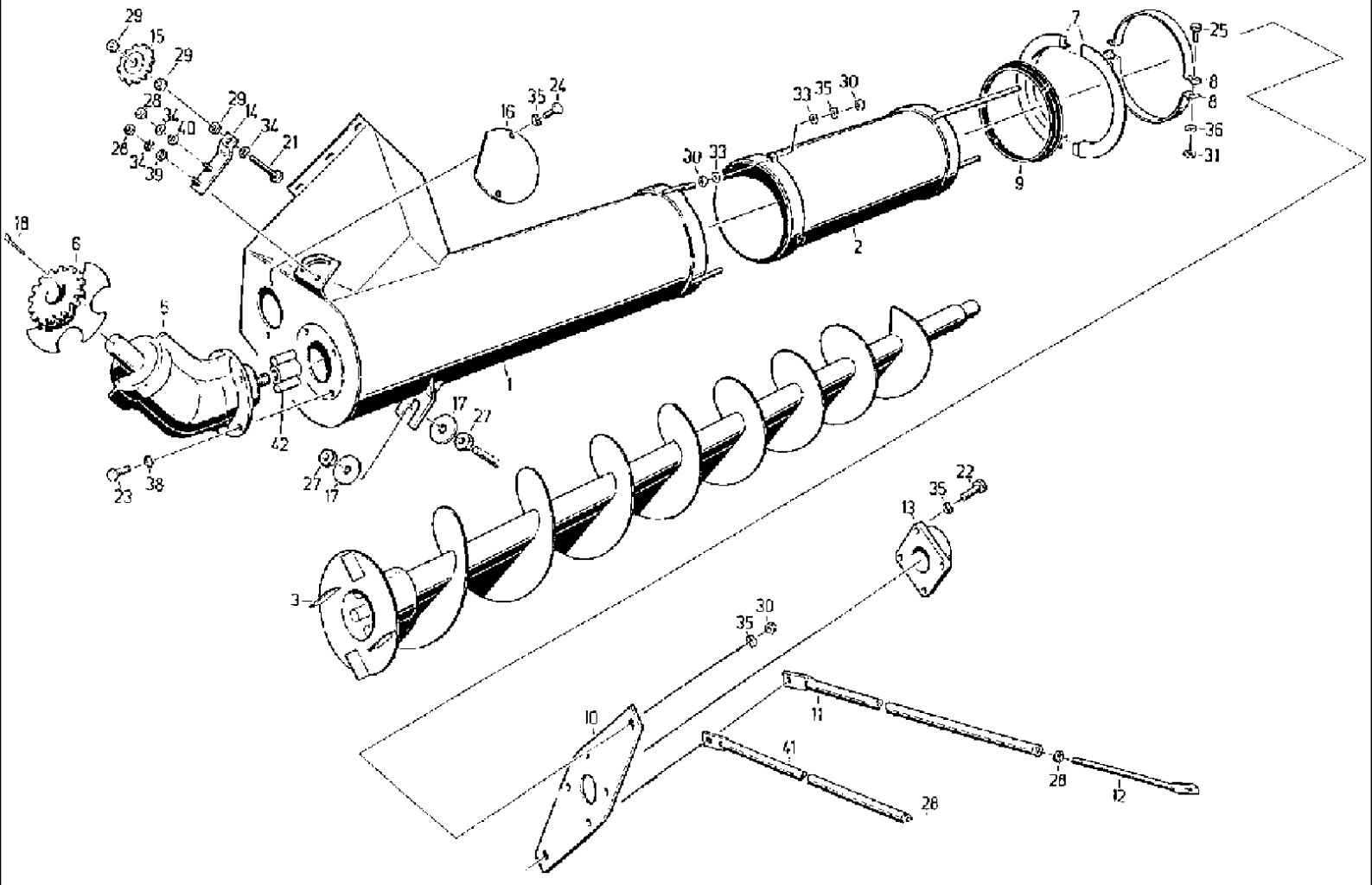

527 CASE IH COMBINE (1/98-12/98)

073 TANK FILLING AUGER

Ref	Part Number	Qty	Description
1	060113805	1	FRAME, funnel
2	060114051	1	HOUSING, head
3	061031956	1	WORM, auger
5	020058363	1	TRANSMISSION, WHEEL bevel
5	060515155	1	GEAR, TRANSMISSION bevel wheel, regeneriert
6	061032104	1	GEAR, WHEEL driving
7	4270722783	2	COVER,
8	4270722814	2	CLAMP,
9	061009314	1	JOINT, RUBBER, packing
10	060114076	1	PLATE, PIVOT, bearing
11	4270722767	1	STAY, brace
12	4270722806	2	SPINDLE,
13	060501978	1	CARRIER, BEARING, HOUSING flange, FWS, 30, U
14	060113950	1	DIPPER, LEVER rocking
15	060501961	1	DRIVE SPROCKET, wheel N, 3/4" -12
16	4260701241	1	COVER,
17	061009322	2	WASHER,
18	9965955332	1	KEY, gib head, 8 x 7 x 32
21	9933932317	1	SCREW, hex, M12 x 60 -8.8
22	9933931123	4	SCREW, hex, M10 x 30 -8.8
23	9933931308	4	SCREW, hex, M10 x 45 -8.8
24	9933960023	2	SCREW, hex, M10 x 12 -8.8
25	006341397	2	SCREW, hex, M8 x 30 -8.8
27	9950896841	2	NUT, hex, M16 -8
28	006214140	4	NUT, hex, M12 -8
29	9950896472	3	NUT, hex, M12 -05
30	006213935	8	NUT, hex, M10 -8
31	006213830	2	NUT, hex, M8 -8
34	006501557	2	WASHER, SPRING, B 12
33	9965964237	6	WASHER, 11 x 20 x 3
35	9961920004	11	WASHER, SPRING, B 10
36	9961920061	2	WASHER, SPRING, B 8
38	006724667	4	SPRING, BELLEVILLE, A 20
39	9961922088	1	WASHER, R 14
40	9960922128	1	WASHER, 14
41	061023747	1	STAY, BRACE
42	061032073	1	DRIVE DOG,

074 TANK COVER, TANK UPPER PART

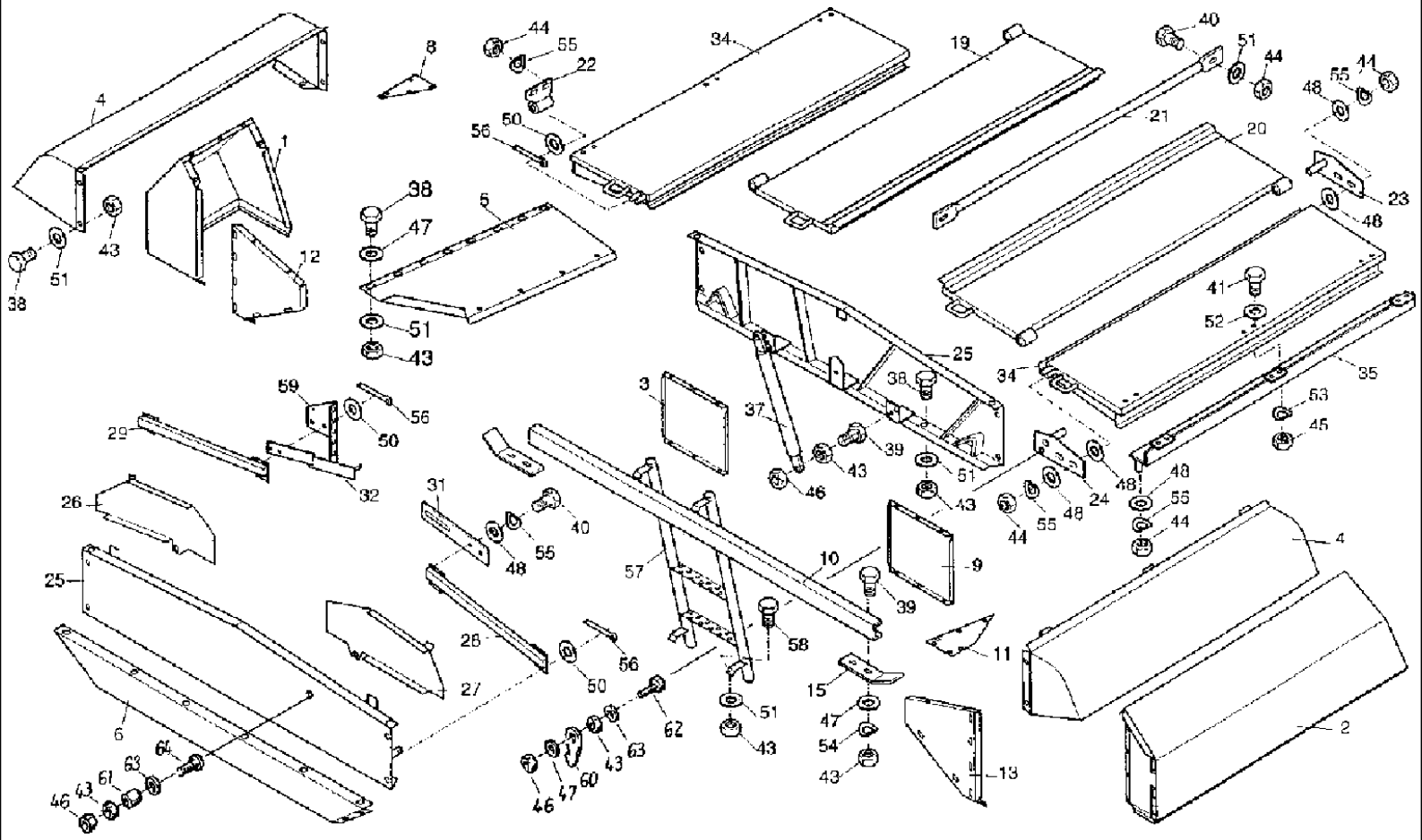

527 CASE IH COMBINE (1/98-12/98)

074 TANK COVER, TANK UPPER PART

Ref	Part Number	Qty	Description
1	061021905	1	SIDE-PLATE, wall, left hand
2	061021938	1	SIDE-PLATE, wall, right hand
3	061027984	1	PARTITION, WALL front, left hand
4	061003647	2	BIT, corner
5	061021970	1	PANEL, PLATE cover
6	061021987	1	PANEL, PLATE cover
8	061011815	2	PROTECTION PLATE, PLATE corner
9	061027992	1	PARTITION, front
10	061011831	1	CARRIER, NUMBER cross
11	061021874	1	PROTECTION PLATE, PLATE corner
12	061021882	1	PARTITION, ELEMENT wall, left hand
13	061021890	1	PARTITION, ELEMENT wall, right hand
15	061011848	2	RETAINER,
19	061003864	1	FLAP,
20	061003903	1	FLAP,
21	061013640	1	ROD, tie
22	061003204	4	BEARING,
23	4260696291	2	SHIN, STRAP hinged
24	4260696306	2	SHIN, STRAP hinged
25	061003936	2	COVER, REAR, wall
26	061003421	2	SPOOL, slide
27	061003438	2	SPOOL, slide
28	061003487	2	LEVER,
29	061003526	2	LEVER,
31	4270721091	2	SHIN, PLATE fish
32	061003542	2	LEVER,
34	061003220	2	COVER,
35	061003278	2	CARRIER, support
37	9270721122	4	CYLINDER, GAS, spring
38	006340781	114	SCREW, hex, M8 x 16 -8.8
39	9933929173	12	SCREW, hex, M8 x 25 -8.8
40	9933929065	10	SCREW, hex, M10 x 20 -8.8
41	060512216	12	SCREW, flat round head, M6 x 16
43	006213830	120	NUT, hex, M8 -8
44	006213935	28	NUT, hex, M10 -8
45	006213734	12	NUT, hex, M6 -8
46	006267080	10	NUT, hex, M8 -8
47	9964962783	10	WASHER, A8.4
48	4221620616	34	WASHER,
50	9960921988	14	WASHER, 13
51	9999853117	110	PLATE, LOCKING, WASHER, VSF M8
52	006510228	12	WASHER, 6.4
53	9961919927	12	WASHER, SPRING, SPARRING plate, B6
54	9961920061	6	WASHER, SPRING, SPARRING plate, B8
55	9961920004	34	WASHER, SPRING, SPARRING plate, B10

074 TANK COVER, TANK UPPER PART

Ref	Part Number	Qty	Description
56	9963950112	10	PIN, SPLIT (COTTER), 4 x 20
57	061015722	1	LADDER, step
58	9933930001	2	SCREW, hex, M8 x 20 -8.8
59	061024057	1	RETAINER,
60	060183617	1	PAWL, HANDLE ratchet
61	060183625	1	SPACER,
62	9941934368	1	SCREW, hex, M8 x 40 -8.8
63	9960963851	2	WASHER, V9
64	9945926210	1	SCREW, round head, M8 x 40 -4.6

076 ASCENDING AUGER

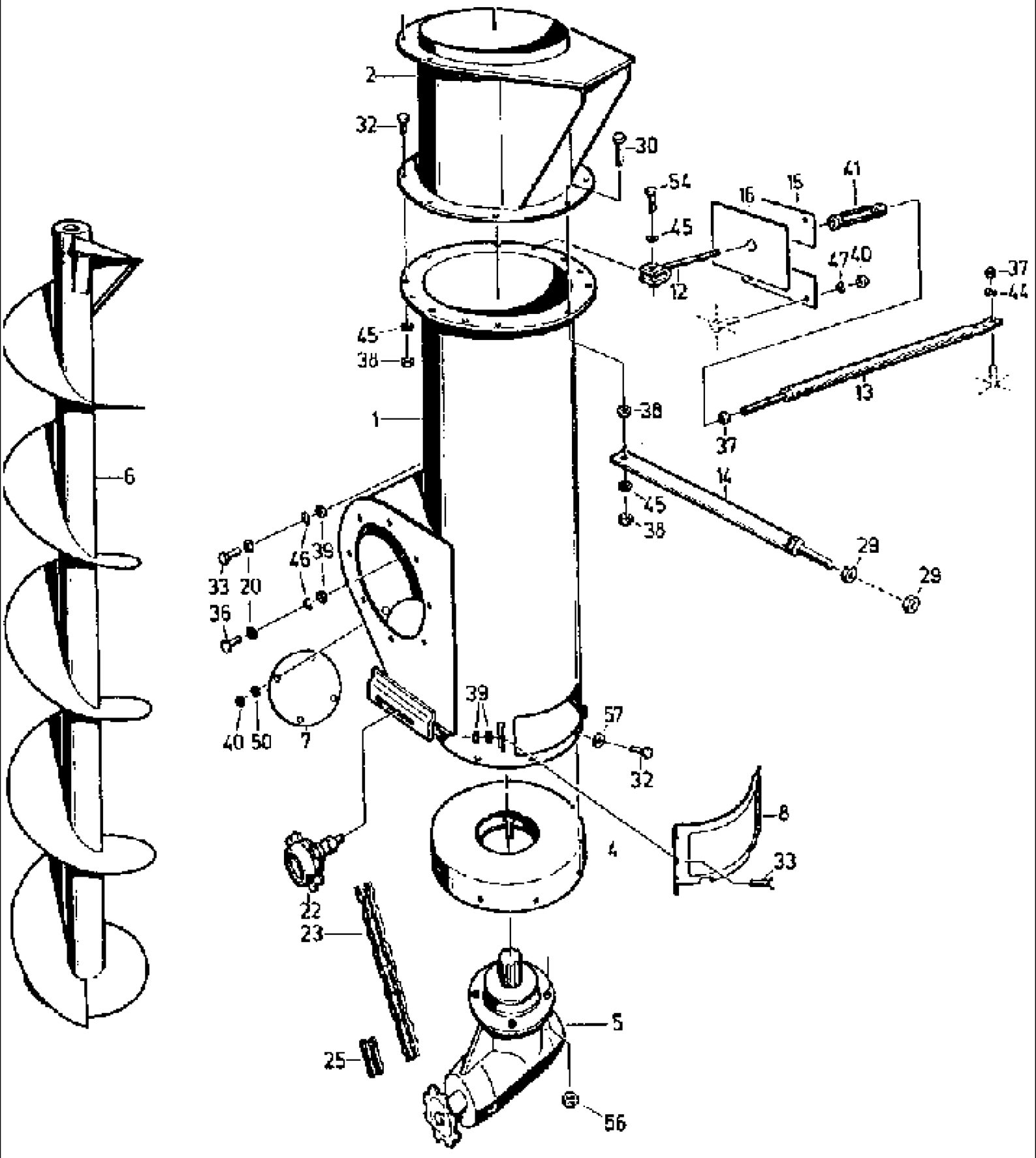

527 CASE IH COMBINE (1/98-12/98)

076 ASCENDING AUGER

Ref	Part Number	Qty	Description
1	061052278	1	HOUSING, auger
2	061032290	1	TUBE, part
4	4260692263	1	BOTTOM, floor
5	020053012	1	GEAR, TRANSMISSION bevel wheel
5	060194291	1	GEAR, TRANSMISSION bevel wheel, regeneriert
6	4260692247	1	WORM, AUGER ascending
7	4260692214	1	COVER,
8	4260692222	1	FLAP,
12	4260700417	1	CRADLE, HITCH trailer
13	4260700425	1	SUPPORT, ROD tie
14	4270717882	1	SUPPORT,
15	4260700394	1	PROTECTOR, STRIP cover
16	4260700400	1	COVER, PLATE
20	4260689114	8	WASHER,
21	4221620616	8	WASHER,
22	9919886123	1	IDLER, FRONT, TENSIONER chain, 12B- 1 x 21
23	060521161	1	CHAIN (AGRICULTURE), roll, 12A -01 x 68
25	006816324	1	CLIP, SPRING, CONNECTOR chain, E-12A -1
29	9950896841	2	NUT, hex, M16 -8
30	9933931228	1	SCREW, hex, M10 x 40, 8.8
32	006343880	18	SCREW, hex, M10 x 22 -8.8
33	9933929173	4	SCREW, hex, M8 x 25 -8.8
36	9945926163	2	SCREW, round head, M8 x 20 -8.8
37	006214140	2	NUT, hex, M12 -8
38	006213935	11	NUT, hex, M10 -8
39	006213830	10	NUT, hex, M8 -8
40	006213734	8	NUT, hex, M6 -8
41	9952949226	1	NUT, SHACKLE screw, SPM12
44	006501557	2	WASHER, SPRING, B12
45	9961920004	2	WASHER, SPRING, B10
46	9961920061	8	WASHER, SPRING, B8
47	9961919927	4	WASHER, SPRING, B6
49	9961924491	19	DISC, NOTCHED, WASHER toothed, A10.5
50	9961924957	4	DISC, NOTCHED, WASHER toothed, A6.4
54	9933931180	1	SCREW, hex, M10 x 35 -8.8
56	9999850901	4	NUT, verbus, M12 -8, W, 196.1

077 TANK UNLOADING AUGER

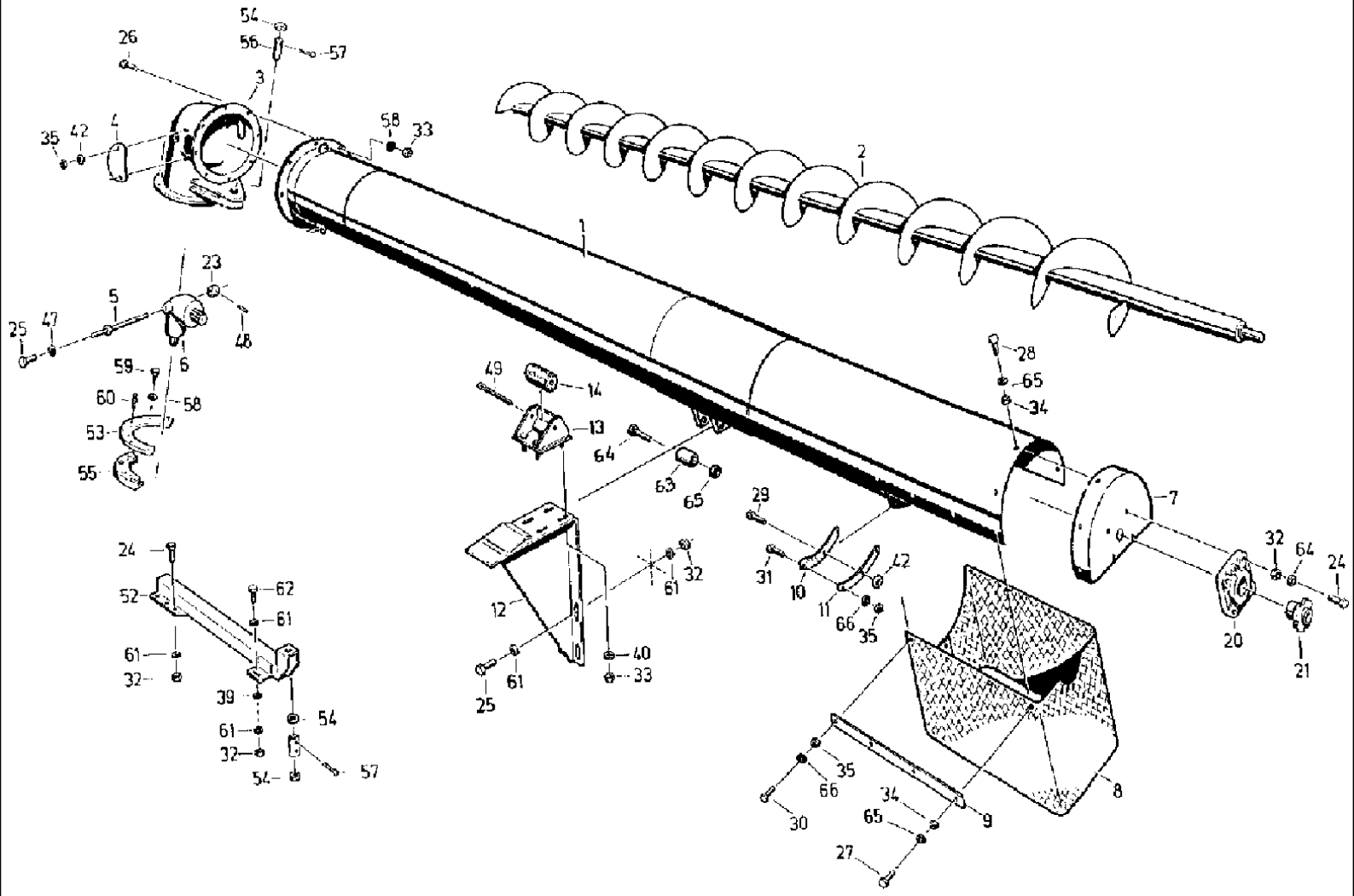

527 CASE IH COMBINE (1/98-12/98)

077 TANK UNLOADING AUGER

Ref	Part Number	Qty	Description
1	061032450	1	TUBE, AUGER
2	061050563	1	WORM,
3	061032241	1	KNEE,
4	4260692327	2	COVER,
5	4260692376	1	TRANSMISSION, shaft
6	4260688218	1	GEAR, TRANSMISSION bevel wheel
6	060194275	1	GEAR, TRANSMISSION bevel wheel, regeneriert
7	4260692302	1	COVER,
8	4260692296	1	EXTENSION, chute
9	4260692288	2	RAIL,
10	4260692343	1	STRIP, SEALING,
11	4260692335	1	SECTOR, segment
12	060207304	1	SUPPORT,
13	4260692392	1	STOP,
14	4221621408	1	MOUNTING, RUBBER, bearing
20	9902888391	1	CARRIER, BEARING, FLANGE, FGE, 207, K
21	9903948098	1	SLEEVE, adapter H, 2307, St
23	9964918425	1	RING, LOCKING, B20
24	006346666	10	SCREW, hex, M12 x 30 -8.8
25	9933931863	6	SCREW, hex, M12 x 25 -8.8
26	006343880	12	SCREW, hex, M10 x 22 -8.8
27	9933930001	2	SCREW, hex, M8 x 20 -8.8
28	006340781	3	SCREW, hex, M8 x 16 -8.8
29	9930977163	1	SCREW, hex, M6 x 20 -8.8
30	006338285	8	hex, M6 x 16 -8.8
31	9933929200	2	SCREW, hex, M6 x 12-8.8
32	006214140	15	NUT, hex, M12 -8
33	006213935	14	NUT, hex, M10 -8
34	006213830	5	NUT, hex, M8 -8
35	006213734	15	NUT, hex, M6 -8
39	9964924175	6	WASHER, A13
40	9964962486	4	WASHER, B10.5
42	006510228	9	WASHER, B6.4
43	006501557	8	WASHER, SPRING, B12
44	9961920004	12	WASHER, SPRING, B10
45	9999853158	10	PLATE, LOCKING, WASHER, VSF B8
46	9961919927	2	WASHER, SPRING, B6
47	9961924506	2	DISC, NOTCHED, WASHER toothed, A12.5
48	9967940822	1	PIN, taper, 5 x 30
49	9963950885	1	PIN, SPLIT (COTTER), 8 x 90
52	061032354	1	ARM,
53	061032178	2	SECTOR, segment
54	061032756	4	SPACER, disk
55	061032200	3	SEGMENT, sliding
56	9949864924	2	PIN, LARGE, bolt, B 20H11 x 70 x 54

527 CASE IH COMBINE (1/98-12/98)

077 TANK UNLOADING AUGER

Ref	Part Number	Qty	Description
57	9963950274	4	PIN, SPLIT (COTTER), 5 x 32
58	9999853094	12	PLATE, LOCKING, WASHER, VSF M10
59	9932931405	12	SCREW, hex, M10 x 60- 8.8
60	9920925523	4	NIPPLE, LUBE,
61	9999853174	8	PLATE, LOCKING, WASER, VSF B10
62	9933932108	1	SCREW, hex, M12 x 40 -8.8
63	060207160	1	ROLLER, SHIFTER, PULLEY
64	9932959352	1	SCREW, hex, M8 x 70 -8.8
65	006267080	1	NUT, hex, M8 -8
66	060150770	9	PLATE, LOCKING, WASHER, VSF B6

079 SAMPLING DEVICE

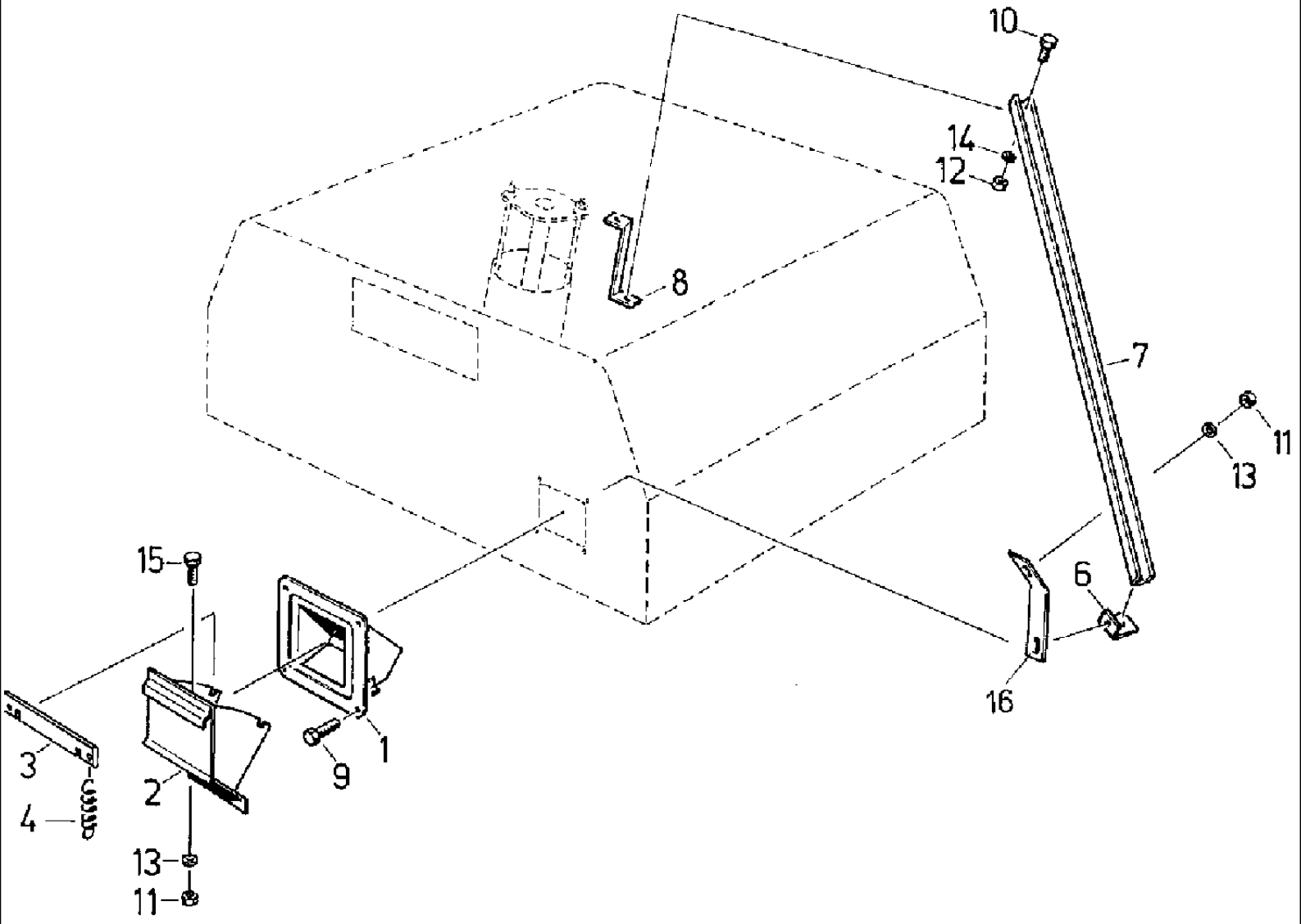

527 CASE IH COMBINE (1/98-12/98)

079 SAMPLING DEVICE

Ref	Part Number	Qty	Description
1	060023627	1	CASE,
2	060023707	1	FLAP,
3	060023764	1	BRIDGE,
4	060023998	2	SPRING, TENSION, A1 x 11 x 60
6	060023780	1	ANGLE, retaining
7	061001210	1	LINE, chute
8	060023803	1	STIRRUP,
9	9933929651	4	SCREW, hex, M6 x 14 -8.8
10	006340781	3	SCREW, hex, M8 x 16 -8.8
11	006213734	6	NUT, hex, M6 -8
12	006213830	3	NUT, hex, M8 -8
13	9999853100	6	PLATE, LOCKING, WASHER, VSF M6
14	9999853117	3	PLATE, LOCKING, WASHER, VSF M8
15	9933929161	2	SCREW, hex, M6 x 10 -8.8
16	061024338	1	RETAINER,

080 REAR BEATER-VARIATOR

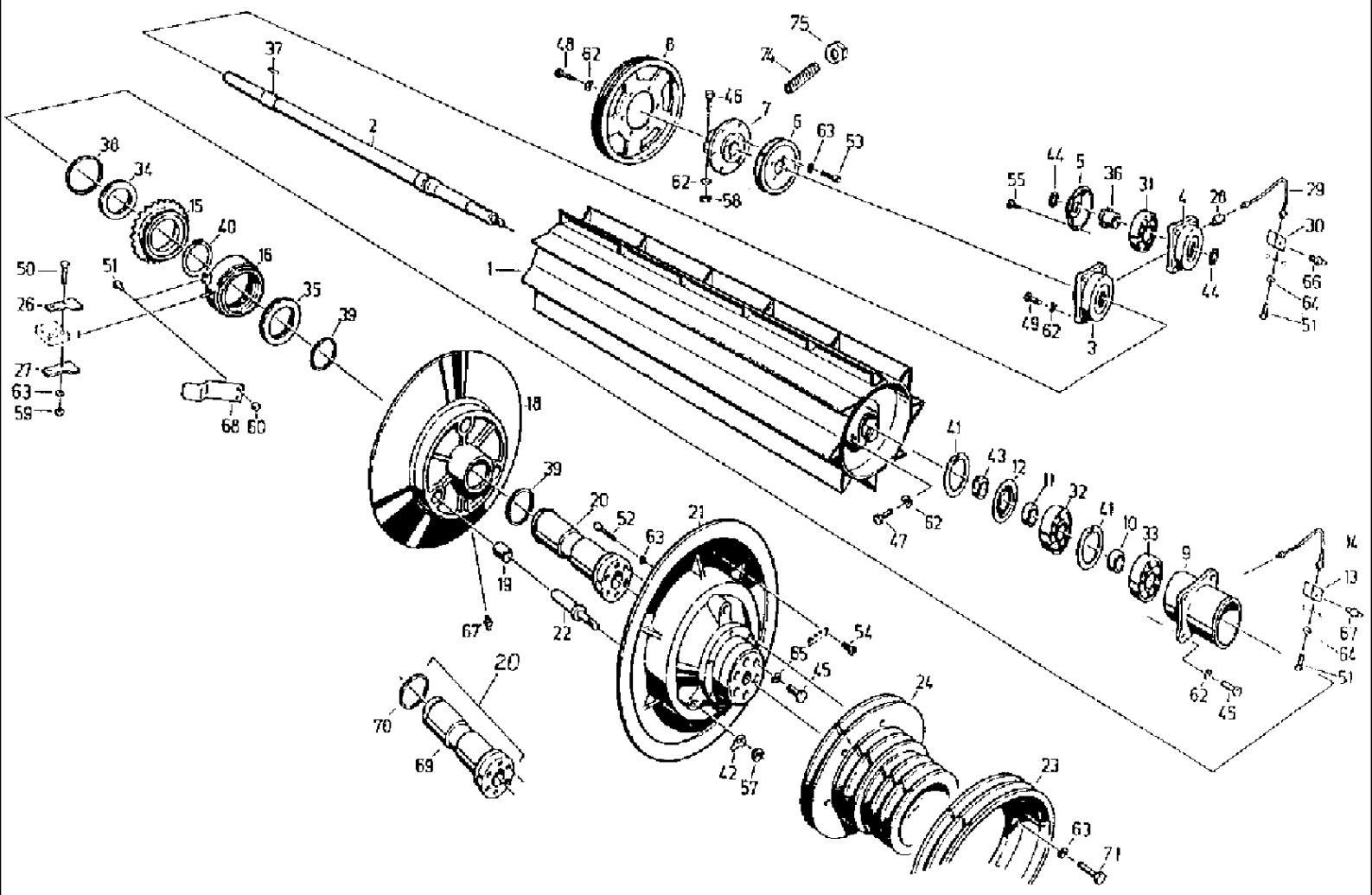

527 CASE IH COMBINE (1/98-12/98)

080 REAR BEATER-VARIATOR

Ref	Part Number	Qty	Description
1	061021150	1	DRUM, cylinder
2	4270719136	1	SHAFT,
3	4260690614	1	BEARING,
4	4260690622	1	HOUSING, BEARING,
5	4260690768	1	COVER,
6	4270719216	1	GROOVED PULLEY, V-BELT
7	4270719208	1	HUB,
8	4270719128	1	GROOVED PULLEY, V-BELT
9	4270719097	1	BEARING COVER, BODY
10	4270719152	1	SPACER, RING
11	4270719111	1	STOP, RING starting
12	4270719224	1	BACK-UP RING, HOLDER packing
13	4270719144	1	SUPPORT, BRANCH lubricant
14	4270719023	1	PIPE, lubricant, right hand
15	4260707464	1	BUSHING, adjustable
16	4260707142	1	SLEEVE, threaded
18	4221620167	1	HALF-ROLLER, PULLEY
19	9926867330	3	BUSHING, D28/36 x 32
20	061016555	1	BUSHING, guide
21	4270719193	1	HALF-ROLLER, PULLEY
22	4221620247	3	PIN, LARGE, BOLT driver
23	061002084	1	GROOVED PULLEY, V-BELT
24	061002068	1	GROOVED PULLEY,
25	4260707376	1	BUSHING,
26	060157422	1	PLATE, KNIFE GUIDE,
27	4260690727	1	PLATE, KNIFE GUIDE,
28	4270719103	1	ADAPTER, PIECE connecting
29	4270719031	1	LINE, lubricant, left
30	4260690735	1	MANIFOLD VALVE, shoe
31	9902889511	1	BEARING, self-align. ball, 1312, K
32	9902890980	1	BEARING, ball, 6311
33	9902893122	1	BEARING, ball, 6311, RS
34	9902888158	1	BEARING, BALL, 51122
35	9902888094	1	BEARING, BALL, 51120
36	9903948081	1	PIN, ROLL, SLEEVE adapter, H-312-St
37	9965957061	1	KEY, BUCKET TOOTHRT, FITTING, A18 x 11 x 70
38	9907914534	1	O-RING, 140 x 3
39	9907915711	2	O-RING, 75 x 3
40	9964917432	1	CIRCLIP, 110 x 4
41	9964917963	2	CIRCLIP, 120 x 4
42	4260708850	3	PLATE, LOCKING,
43	9910912088	1	BUSHING, LARGE, RING felt, 65
44	9910911882	1	BUSHING, LARGE, RING felt, 55
45	9935932950	6	SCREW, hex, M16 x 1.5 x 35 -8.8
46	9933878120	2	SCREW, hex, M12 x 80 -10.9

527 CASE IH COMBINE (1/98-12/98)

080 REAR BEATER-VARIATOR

Ref	Part Number	Qty	Description
47	9933960998	4	SCREW, hex, M12 x 55 -8.8
48	9933932028	6	SCREW, hex, M12 x 35 -8.8
49	006346666	7	SCREW, hex, M12 x 30 -8.8
50	9933930331	2	SCREW, hex, M8 x 40 -8.8
51	9933929651	6	SCREW, hex, M6 x 14 -8.8
52	006281191	12	SCREW, cheese head, M8 x 30 -8.8
53	9937938544	4	SCREW, cheese head, M8 x 20 -8.8
54	9941934206	2	SCREW, countersunk, M6 x 16 -4.8
55	9941934214	4	SCREW, countersunk, M5 x 10 -4.8
56	006267144	1	NUT, hex, M20 -8
57	9950898185	3	NUT, hex, M20 x 1.5, 05
58	9999850895	2	NUT, verbus, M12 -10
59	006213830	2	NUT, hex, M8 -8
60	006267111	2	NUT, hex, M6 -8
62	006501557	14	WASHER, SPRING, B12
63	9961920061	6	WASHER, SPRING, B8
64	9961919927	4	WASHER, SPRING, B6
65	9961924932	6	DISC, NOTCHED, WASHER toothed, J16
66	9920925515	1	NIPPLE, LUBE, BM8 x 1
67	003617056	3	NIPPLE, LUBE, AM8 x 1
68	4260711364	1	SHIN, STRAP butt
69	061016563	1	BUSHING, guide
70	061016571	1	BACK-UP RING, support
71	006341397	6	SCREW, hex, M8 x 30 -8.8
72	4260707376	1	BUSHING,
73	006267144	1	NUT, hex, M20 -8
74	061065844	1	THREADED ROD, PIN, M12 x 35
75	9950896841	1	NUT, hex, M16 -8
75	9950896841	1	NUT, hex, M16 -8

082 DRIVE ELEMENTS, LEFT SIDE

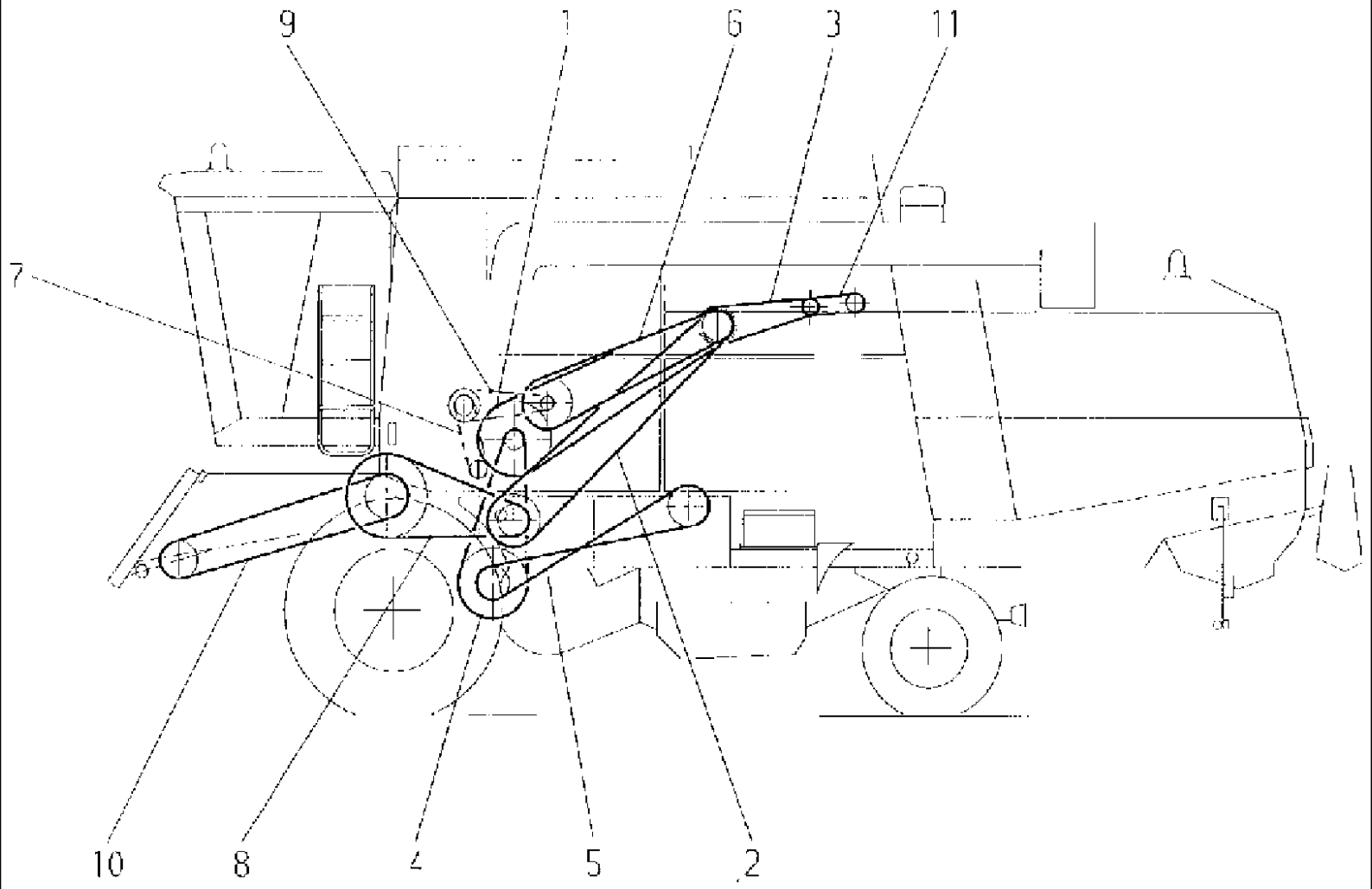

527 CASE IH COMBINE (1/98-12/98)

082 DRIVE ELEMENTS, LEFT SIDE

Ref	Part Number	Qty	Description
1	061020978	1	V-BELT, composite, 3HB 4455 K
2	060168160	1	V-BELT, composite, 3HB 4860
3	4270717737	1	V-BELT, composite, 4HB 2120
4	4270722252	1	BELT, narrow, vee, XPB 3000
5	061009082	1	BELT, narrow, vee, SPB 3750
6	061020986	1	V-BELT, composite, 2HB 3515 K
7	9917903634	1	CHAIN (AGRICULTURE), roller, 12 B-1 x 68
8	061009074	1	V-BELT, composite, 3HB 3150
9	9917903505	1	CHAIN (AGRICULTURE), roller, 12 B-2 x 86E
10	061004680	1	V-BELT, composite, 4HB 4060K
11	060500044	1	BELTS, SET OF 2, one V, 2A x 1000

083 DRIVE ELEMENTS, RIGHT SIDE

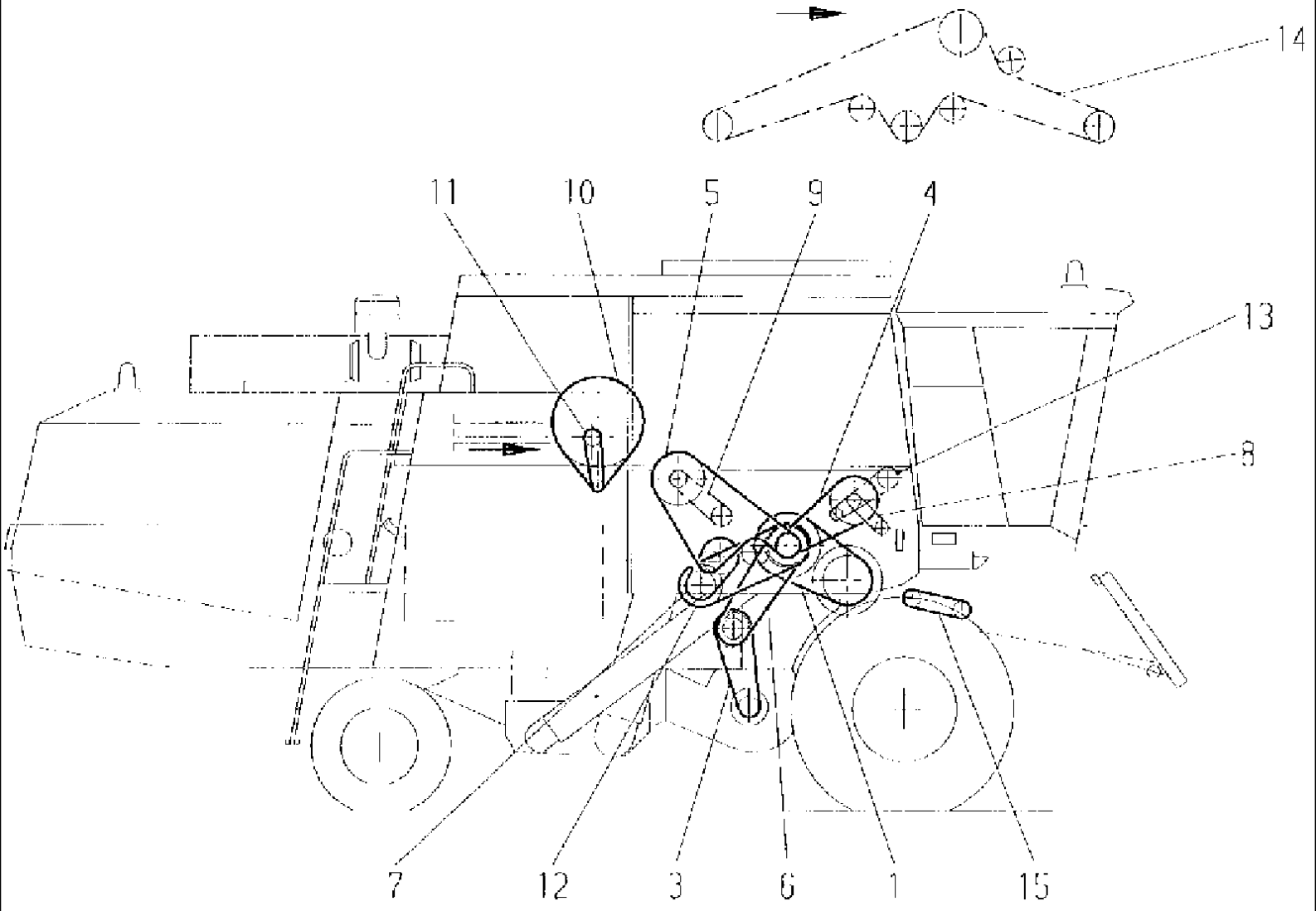

527 CASE IH COMBINE (1/98-12/98)

083 DRIVE ELEMENTS, RIGHT SIDE

Ref	Part Number	Qty	Description
1	060183586	1	BELT, wide, vee, 50 x 24 x 2270
3	4240023354	1	BELT, wide, vee, 36 x 14 x 1720
4	4260700015	1	BELT, narrow, vee, SPB 2000
5	4270722517	1	BELTS, SET OF 2, narrow, vee, 2XPB 3000
6	061011077	1	BELT, narrow, vee, SPB 2360
7	061009396	1	BELTS, SET OF 3, narrow, vee, 3SPB 1250
8	9917903521	1	CHAIN (AGRICULTURE), roller, 12A- 1 x 46E
9	060504683	1	CHAIN (AGRICULTURE), roller, 12A -1 x 80E
10	061017105	1	BELT, narrow, vee, SPZ 2500
11	061029584	1	BELT, narrow, vee, SPZ 1060
12	061009402	1	BELTS, SET OF 2, narrow, vee, 2 SPB 2360
13	060502970	1	CHAIN (AGRICULTURE), roller, 12B -1 x 70E
14	060503006	1	CHAIN (AGRICULTURE), roller, 12B -1 x 150E
15	060504843	1	CHAIN (AGRICULTURE), roller, 12B-1 x 62E

084 MOWER CLUTCH

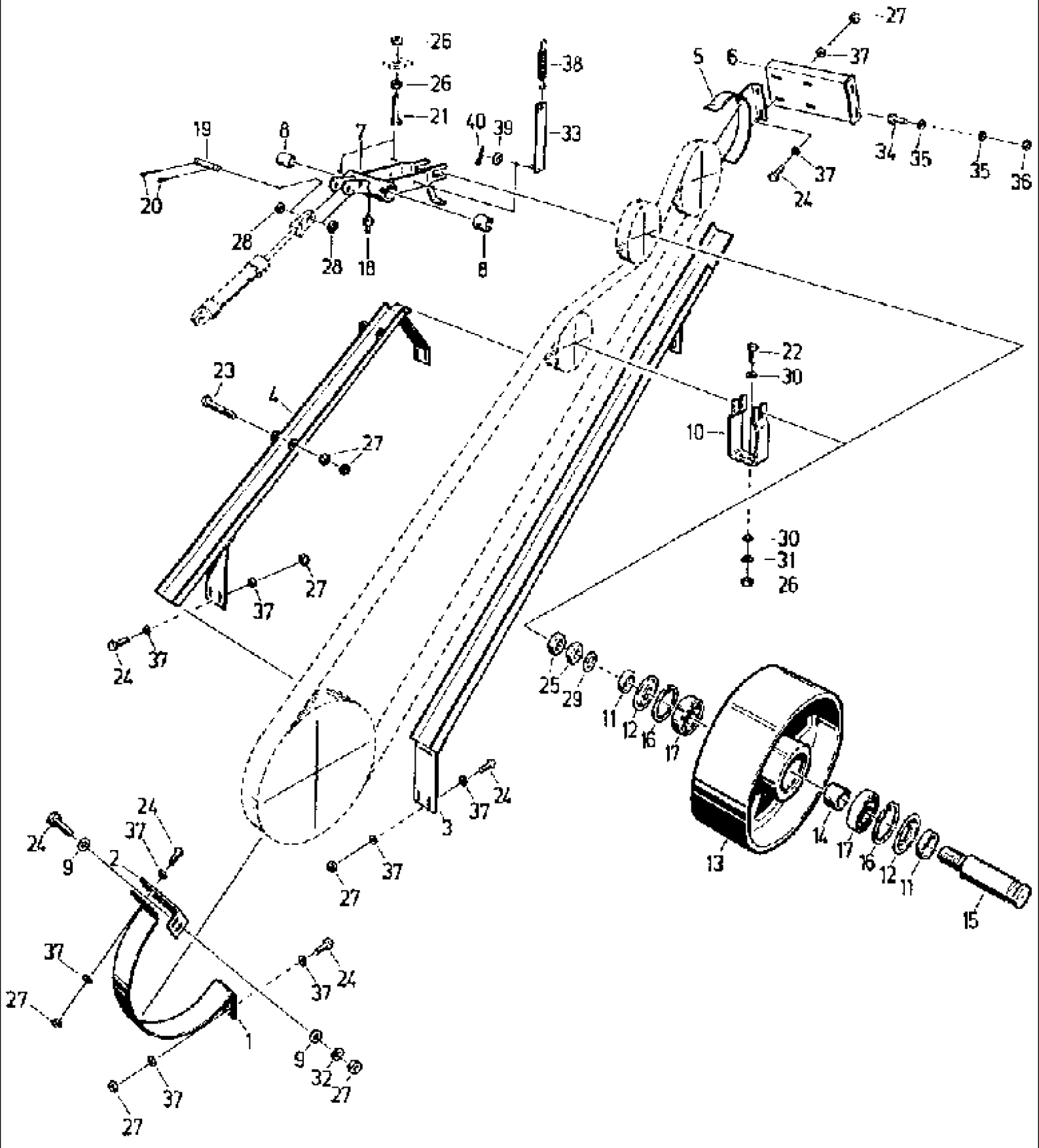

527 CASE IH COMBINE (1/98-12/98)

084 MOWER CLUTCH

Ref	Part Number	Qty	Description
1	4270721524	1	BOW,
2	4270721532	1	ANGLE BAR,
3	4270721493	1	GUIDE, BELT
4	4270721485	1	BUSHING, LARGE, BODY guiding
5	4270721516	1	GUARD,
6	4270721508	1	ADAPTER, PIECE connecting
7	4270721460	1	DIPPER, LOCKING rocking
8	4241021230	2	BUSHING, sliding
9	4260689114	4	WASHER,
10	061034042	1	CLEVIS, fork
11	4240029423	4	BUSHING,
12	4240023916	4	SEAL WASHER,
13	4240029431	2	ROLLER, SHIFTER,
14	4240024958	2	BUSHING,
15	4240024966	2	PIN, LARGE, BOLT
16	9964917787	4	CIRCLIP, 52 x 2
17	9902890441	4	BEARING, ball, 6205 RS
18	003617056	1	NIPPLE, LUBE, AM 8 x 1
19	9949865443	2	PIN, LARGE, BOLT
20	9963950274	4	PIN, SPLIT (COTTER), 5 x 32
21	9933932317	2	SCREW, hex, M12 x 60 -8.8
22	9933932028	2	SCREW, hex, M12 x 35 -8.8
23	9933960320	2	SCREW, hex, M8 x 100 -8.8
24	9933929173	16	SCREW, hex, M8 x 25 -8.8
25	006222647	4	NUT, hex, M16 x 1.5 -04
26	006214140	6	NUT, hex, M12 -8
27	006213830	20	NUT, hex, M8 -8
28	006511204	4	WASHER, A21
29	9960962055	2	WASHER, 18
30	4250132814	4	WASHER,
31	006501557	2	WASHER, SPRING, B12
32	9961920061	2	WASHER, SPRING, B8
33	061016313	1	STAY, strud
34	006344037	2	SCREW, hex, M10 x 25 -8.8
35	9999853166	4	PLATE, LOCKING, WASHER, VSF- B10
36	006213935	2	NUT, hex, M10 -8
37	9999853158	28	PLATE, LOCKING, WASHER, VSF- B8
38	9974881065	1	SPRING, TENSION, B5-5 x 60 x 25 Aa
39	9960921633	1	WASHER, A8.4
40	9963949424	1	PIN, SPLIT (COTTER), 2 x 16

086 THRESHING GEAR CLUTCH

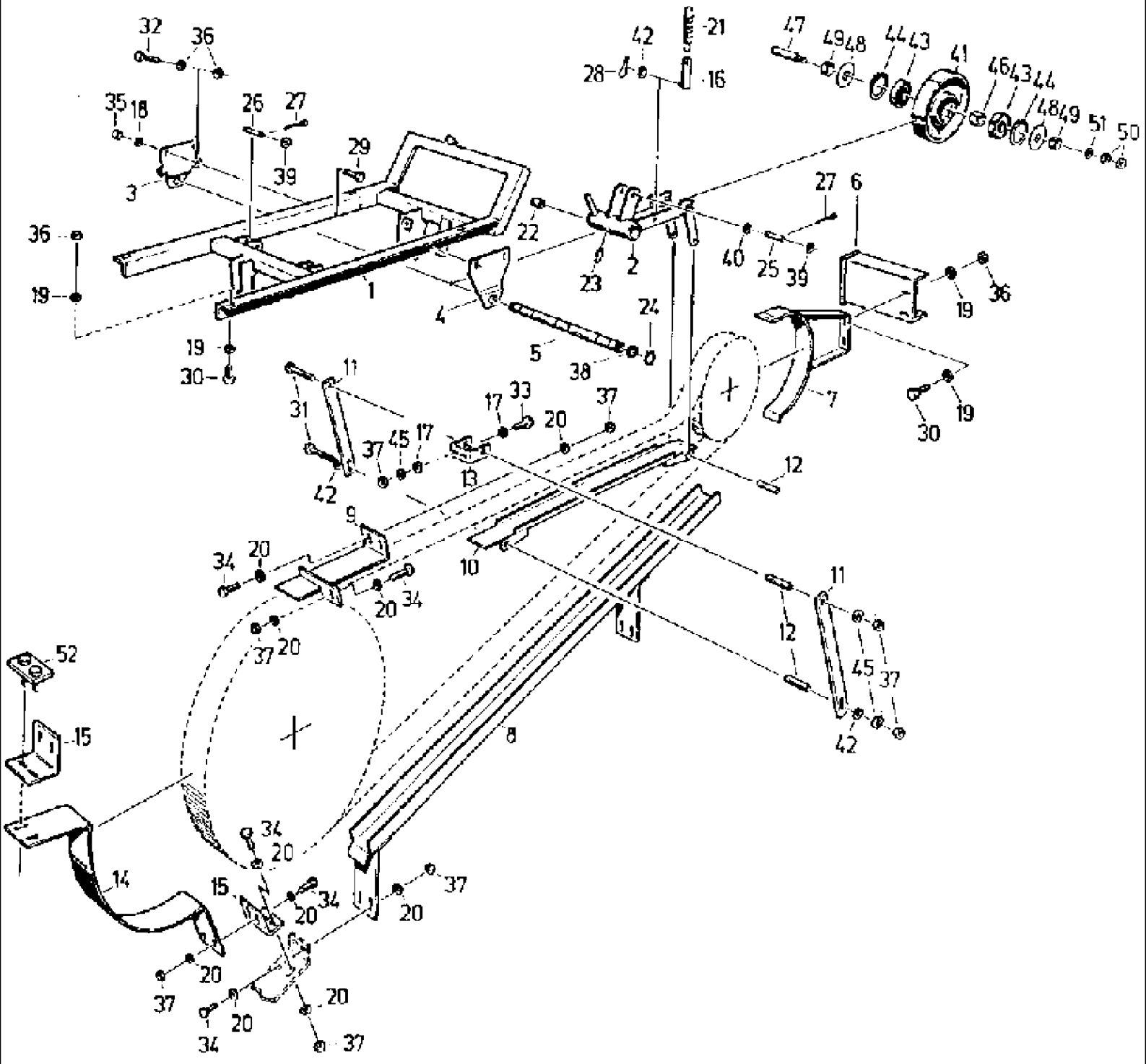

527 CASE IH COMBINE (1/98-12/98)

086 THRESHING GEAR CLUTCH

Ref	Part Number	Qty	Description
1	4270721540	1	FRAME,
2	4270721557	1	DIPPER, LEVER pivoted
3	4270721565	1	BEARING, end shield
4	4270721612	1	BEARING,
5	4270721604	1	HOUSING, axle tube
6	4270721573	1	ADAPTER, PIECE connecting
7	060168007	1	PROTECTOR,
8	4270721581	1	GUIDE, belt
9	4260694691	1	LANDSIDE, SURFACE bearing
10	4260694706	1	SHEET, rocker
11	4260694722	2	SHIN, strap
12	4250120240	3	SLEEVE,
13	4250120257	1	BEARING,
14	4270721620	1	BOW,
15	4250128971	2	ANGLE BAR,
16	061016313	1	STAY, strud
17	4260689114	2	WASHER,
18	9999853174	4	PLATE, LOCKING, WASHER, VSF B12
19	9999853166	14	PLATE, LOCKING, WASHER, VSF B10
20	9999853158	30	PLATE, LOCKING, WASHER, VSF B 8
21	9974881065	1	SPRING, TENSION, B5, 5 x 60 x 25
22	4241021230	2	BUSHING, sliding
23	003617056	1	NIPPLE, LUBE, AM 8 x 1
24	9964917264	2	CIRCLIP, 40 x 1.6
25	9949864305	1	PIN, LARGE, BOLT, B10 h11 x 70
26	9949865443	1	PIN, LARGE, BOLT, B20 h11 x 60
27	9963950274	4	PIN, SPLIT (COTTER), 5 x 32
28	9963949424	1	PIN, SPLIT (COTTER), 2 x 16
29	006346666	4	SCREW, hex, M12 x 30 -8.8
30	9933931123	4	SCREW, hex, M10 x 30 -8.8
31	9932958745	3	SCREW, hex, M8 x 90 -8.8
32	006344736	2	SCREW, hex, M10 x 50 -8.8
33	9933929173	3	SCREW, hex, M8 x 25 -8.8
34	9933959415	15	SCREW, hex, M8 x 22 -8.8
35	006214140	4	NUT, hex, M12 -8
36	006213935	12	NUT, hex, M10 -8
37	006213830	20	NUT, hex, M8 -8
38	9965962171	6	WASHER, 42 x 60 x 3
39	006511204	4	WASHER, A21
40	9965921372	1	WASHER, 22 x 36 x 5
41	4240029431	2	ROLLER, SHIFTER,
42	9960921633	3	WASHER, A8.4
43	9902890441	2	BEARING, ball, 6205 - RS
44	9964917787	2	CIRCLIP, 52 x 2
45	9961920061	5	WASHER, SPRING, SPARING plate, B 8

527 CASE IH COMBINE (1/98-12/98)

086 THRESHING GEAR CLUTCH

Ref	Part Number	Qty	Description
46	4240024958	1	BUSHING,
47	4240024966	1	PIN, LARGE, BOLT
48	4240023916	2	SEAL WASHER,
49	4240029423	2	BUSHING,
50	006222647	2	NUT, hex, M16 x 1, 5 -04
51	003784455	1	WASHER, 17
52	061051035	1	PLATE, SCREW

088 UNLOADING CLUTCH

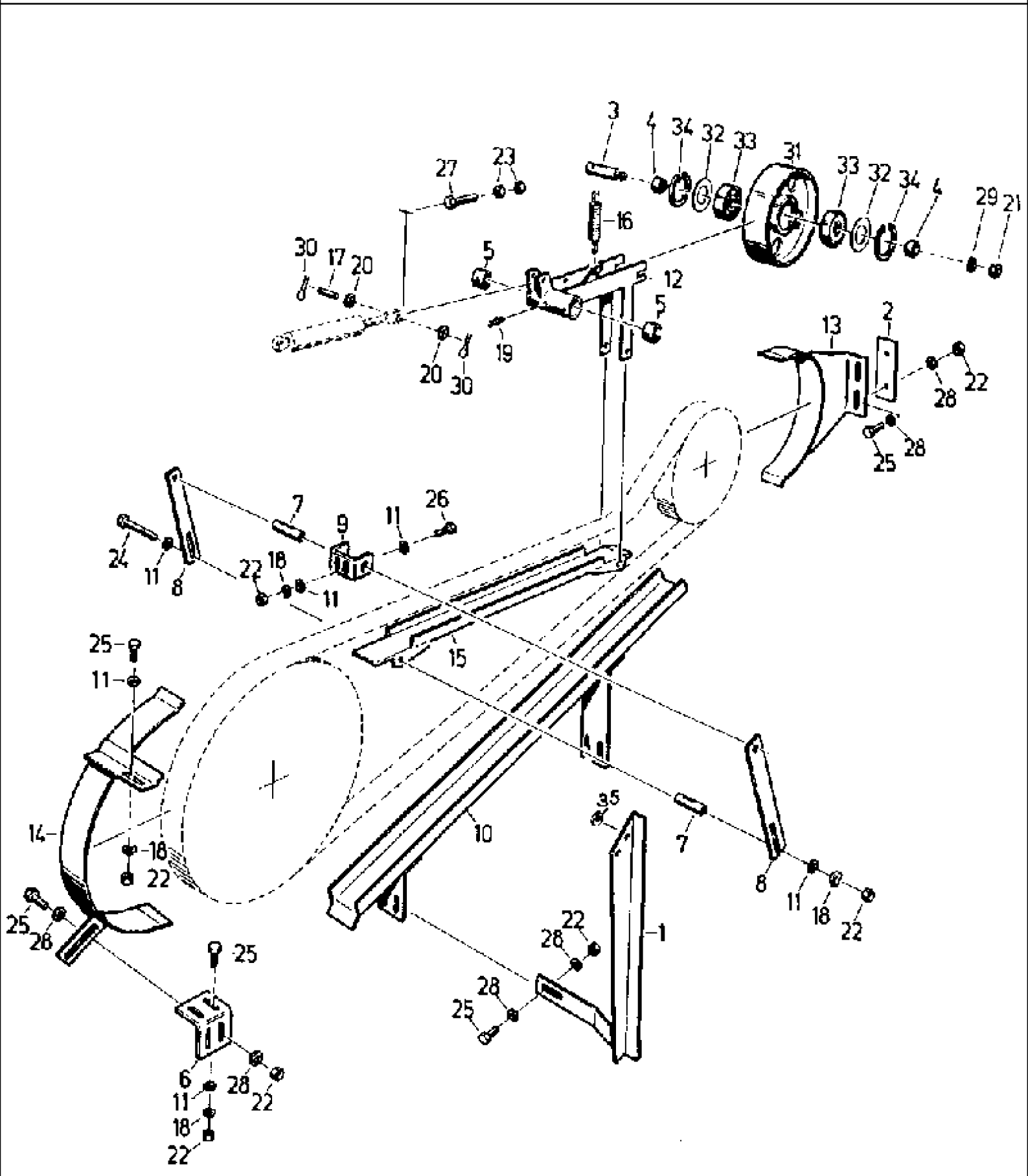

527 CASE IH COMBINE (1/98-12/98)

088 UNLOADING CLUTCH

Ref	Part Number	Qty	Description
1	4270720090	1	SUSPENSION BLOCK,
2	060159947	1	BLOCK,
3	4250130113	1	PIN, LARGE, BOLT
4	4240022683	2	BUSHING,
5	4241021230	2	BUSHING, sliding
6	4270720105	1	RETAINER,
7	4260694747	3	SLEEVE,
8	4260694730	2	SHIN, STRAP
9	4260694755	1	BEARING,
10	4270720074	1	GUIDE, BELT
11	4260689114	10	WASHER,
12	4270720113	1	DIPPER, LEVER pivoted
13	4270720066	1	GUARD, AK
14	4270720082	1	PROTECTOR,
15	060168521	1	GUIDE, rocker
16	9974881065	1	SPRING, TENSION, B5.5 x 60 x 25 Aa
17	9949865443	2	PIN, LARGE, BOLT, B20 h11 x 60 x 44
18	9961920061	8	WASHER, SPRING, B8
19	003617056	1	NIPPLE, LUBE, AM 8 x 1
20	006511204	4	WASHER, A21
21	006213308	1	NUT, hex, M12 x 1.5 -8
22	006213830	18	NUT, hex, M8 -8
23	006214140	2	NUT, hex, M12 -8
24	9932930558	3	SCREW, hex, M8 x 80 -8.8
25	9933959415	13	SCREW, hex, M8 x 22 -8.8
26	9933929173	2	SCREW, hex, M8 x 25 -8.8
27	9933932567	1	SCREW, hex, M12 x 70 -8.8
28	9999853158	18	PLATE, LOCKING, WASHER, VSF B 8
29	9999853174	1	PLATE, LOCKING, WASHER, VSF B 12
30	9963950274	4	PIN, SPLIT (COTTER), 5 x 32"
31	4260694827	1	ROLLER, SHIFTER,
32	4221624162	2	SEAL WASHER,
33	9902890730	2	BEARING, grooved ball, 6304 - RS
34	9964917787	2	CIRCLIP, 52 x 2"
35	006510943	2	WASHER, A 8.4

089 CYLINDER CONTROL

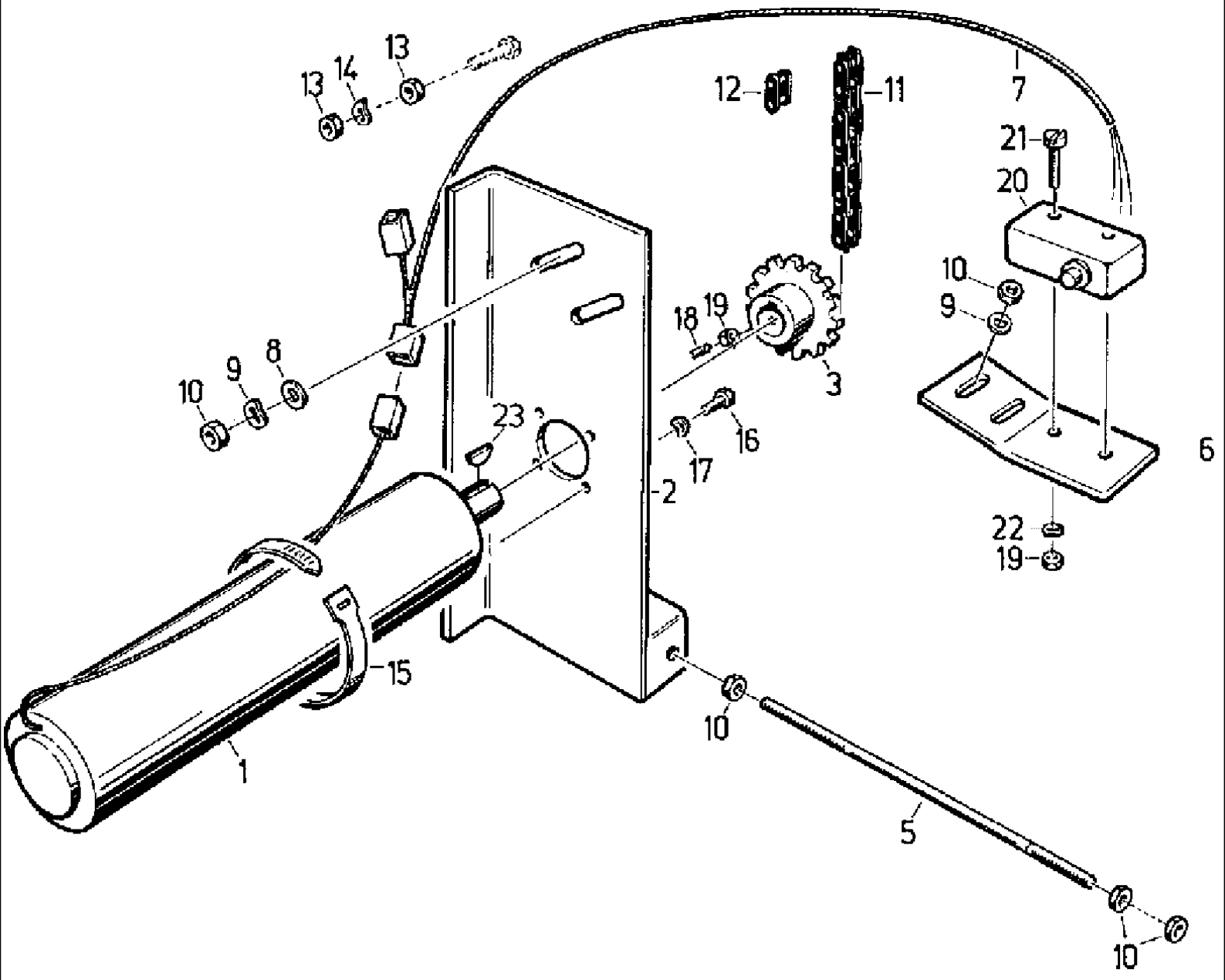

527 CASE IH COMBINE (1/98-12/98)

089 CYLINDER CONTROL

Ref	Part Number	Qty	Description
1	4254137696	1	MOTO-REDUCTION GEAR, MOTOR dc, GR 53 x 58 PLG 52.0
2	4260715608	1	FASTENER, support
3	4260702845	1	DRIVE SPROCKET,
5	4260715585	1	HOOK, spindle
6	060203591	1	ANGLE BAR,
7	060030601	1	LINE, lead
8	4260689114	2	WASHER,
9	9961920061	4	WASHER, SPRING, B8
10	006213830	8	NUT, hex, M8 -8
11	003783743	1	CHAIN (AGRICULTURE), roll, 08 B- 1 x 77 B
12	9917905468	1	LINK, chain, E 08 B-1
13	006213734	2	NUT, hex, M 6 -8
14	9961919927	1	WASHER, SPRING, B6
15	9019973091	1	NO DESCRIPTION, BAND cable, 280 lg.
16	9933928980	4	SCREW, hex, M5 x 12 -8.8
17	9961919902	4	WASHER, SPRING, B5
18	9947940311	1	PIN, SCREW set, M4 x 10 -14H
19	9950895496	3	NUT, hex, M4 -8
20	9019974252	1	INDICATOR, microswitch, B1.D 1
21	9936938955	2	SCREW, cheese-head, M4 x 25 -5.8
22	9961919896	2	WASHER, SPRING, B 4
23	060153170	1	SPRING, KEY woodruff, 4 x 6.5

090 BLOWER CONTROL

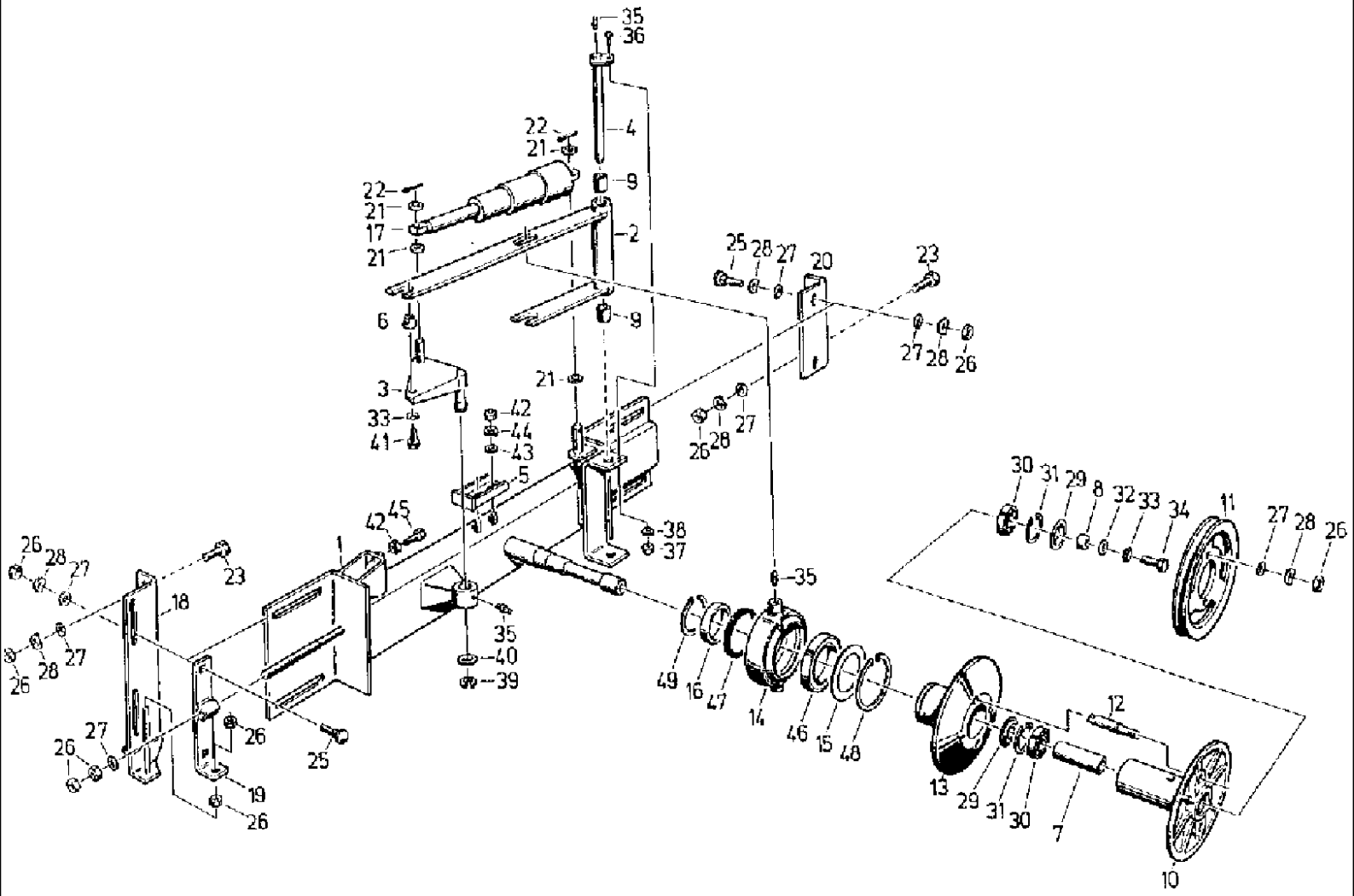

527 CASE IH COMBINE (1/98-12/98)

090 BLOWER CONTROL

Ref	Part Number	Qty	Description
1	4260714857	1	SUPPORT, BASE bearing
2	4260714865	1	CLEVIS, fork
3	4260714873	1	LEVER, bent
4	4260714881	1	AXLE,
5	060092630	1	STOP,
6	4260714898	1	SHAFT, CROSS, PIN driver
7	4260692874	1	SPACER, TUBE
8	4240029423	1	BUSHING,
9	4223649031	2	BUSHING,
10	4260692882	1	FLANGE, WASHER
11	060143980	1	GROOVED PULLEY, V-BELT
12	4260702853	2	PIN, LARGE, BOLT
13	4260692905	1	DISC, PULLEY regulating
14	4260692913	1	HOUSING, BEARING,
15	4260692921	1	SEAL WASHER,
16	4260692938	1	SLIP-RING MOTOR,
17	060533470	1	CYLINDER ASSY., DRIVE spindle
18	4260714816	1	ANGLE, tensioning
19	4260714832	1	SHIN, tensioner
20	4260714840	1	ANGLE BAR,
21	9960921988	4	WASHER, A13
22	006402361	2	PIN, SPLIT (COTTER), 4 x 25
23	006346666	4	SCREW, hex, M12 x 30 -8.8
25	9945926428	2	SCREW, round-head, M12 x 30 -8.8
26	006214140	14	NUT, hex, M12 -8
27	4250132814	11	WASHER,
28	006501557	10	WASHER, SPRING, B12
29	4240023916	2	SEAL WASHER,
30	9902890433	2	BEARING, ball, 6205
31	9964917787	2	CIRCLIP, 52 x 2
32	9964965183	1	DISC, WASHER end
33	9961924491	2	DISC, NOTCHED, WASHER toothed, A10.5
34	006344037	1	SCREW, hex, M10 x 25 -8.8
35	003617056	4	NIPPLE, LUBE, AM 8 x 1
36	9933930001	1	SCREW, hex, M8 x 20 -8.8
37	006213830	1	NUT, hex, M8 -8
38	9961920061	1	WASHER, SPRING, B 8
39	9964917088	1	CIRCLIP, 24 x 1.2
40	9960962930	1	WASHER, A25
41	006343880	1	SCREW, hex, M10 x 22 -8.8
42	006213935	3	NUT, hex, M10 -8
43	4260689114	2	WASHER,
44	9961920004	2	WASHER, SPRING, B10
45	9933931308	1	SCREW, hex, M10 x 45 -8.8
46	9902892765	1	BEARING, ball, 6016 RS

090 BLOWER CONTROL

Ref	Part Number	Qty	Description
47	9905872148	1	BUSHING, LARGE, SEAL shaft, D90 x 120 x 10
48	9964917633	1	CIRCLIP, 125 x 4
49	9964917408	1	CIRCLIP, 80 x 2.5

092 IDLER PULLEYS, LEFT

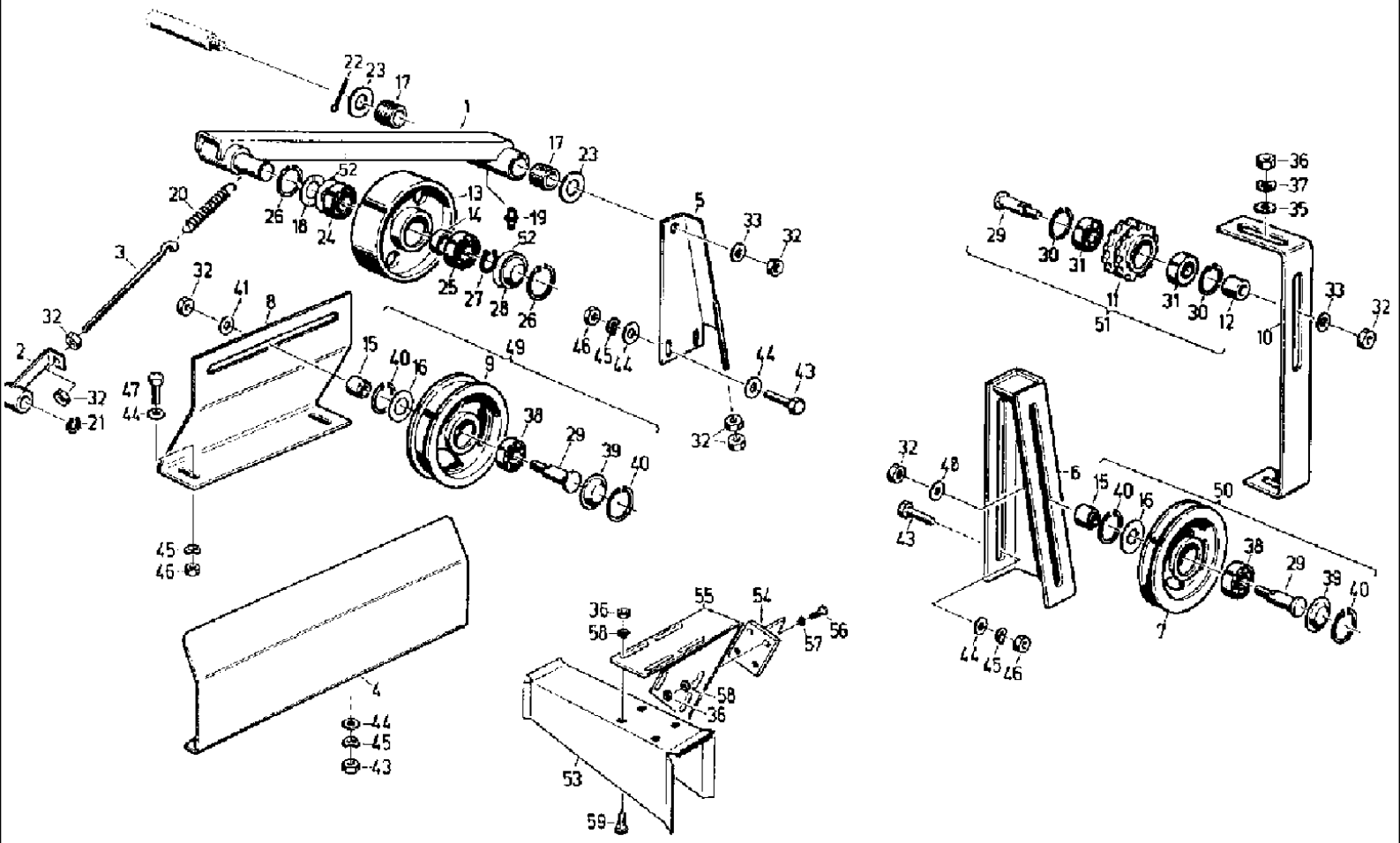

527 CASE IH COMBINE (1/98-12/98)

092 IDLER PULLEYS, LEFT

Ref	Part Number	Qty	Description
1	061007111	1	LEVER, ROCKER, arm
2	4270722068	1	PIVOT, LEVER rocking
3	4270722076	1	SCREW, eyelet
4	061005070	1	PROTECTOR,
5	060121042	1	STIFFENER, SUPPORT adjusting
6	061019863	1	BRACKET,
7	060160893	1	ROLLER, SHIFTER,
8	060121130	1	BAR, RAIL tension
9	4250125212	1	ROLLER, SHIFTER,
10	4270722164	1	RAIL,
11	4260696066	1	DRIVE SPROCKET, wheel
12	4240022683	1	BUSHING,
13	061007128	1	TIGHTENER SHEAVE, PULLEY tension
14	4240024941	1	BUSHING,
15	4250125220	2	BUSHING,
16	4110085640	2	SEAL WASHER,
17	9926868067	2	BUSHING, H32/40 x 22
18	4221613063	1	SEAL WASHER,
19	9920925548	1	NIPPLE, LUBE, CM 8 x 1
20	9974882074	1	SPRING, TENSION,
21	9964917143	1	CIRCLIP, 16 x 1
22	006403836	1	PIN, SPLIT (COTTER), 6.3 x 50
23	9960922931	2	WASHER, 33
24	9902890474	1	BEARING, ball, 6206 -RS
25	9902890466	1	BEARING, ball, 6206
26	9964917818	2	CIRCLIP, 62 x 2
27	9964917215	1	CIRCLIP, 30 x 1.5
28	9904868997	1	COVER, 62
29	9949865572	3	PIN, LARGE, BOLT, 65
30	9964917746	2	CIRCLIP, 42 x 1.6
31	9902892781	2	BEARING, ball, 6004 - RS
32	006214140	7	NUT, hex, M12 -8
33	9999853174	2	PLATE, LOCKING, WASHER, VSF B 12
35	4260689114	3	WASHER,
36	006213830	9	NUT, hex, M8 -8
37	9961920061	3	WASHER, SPRING, B8
38	9902890642	2	BEARING, ball, 6204 - RS
39	9904868931	2	COVER, 47
40	9964917770	4	CIRCLIP, 47
41	9999853174	1	PLATE, LOCKING, WASHER, VSF B12
43	006344037	6	SCREW, hex, M10 x 25 -8.8
44	4221620616	12	WASHER,
45	9961920004	8	WASHER, SPRING, B10
46	006213935	6	NUT, hex, M10 -8
47	9933931123	2	SCREW, hex, M10 x 30 -8.8

092 IDLER PULLEYS, LEFT

Ref	Part Number	Qty	Description
48	9999853174	1	PLATE, LOCKING, WASHER, VSF B12
49	020797274	1	TIGHTENER SHEAVE, PULLEY tension
50	060160885	1	TIGHTENER SHEAVE, PULLEY tension
51	060067533	1	IDLER, FRONT, TENSIONER chain
52	9965920644	2	SHIM, WASHER precision, 50 x 62 x 0.5
53	061052831	1	CHUTE (DOWNWARD),
54	061052848	1	PLATE, fastening
55	061052872	1	SUPPORT,
56	006341243	6	SCREW, hex, M8 x 25 -8.8
57	006510943	8	WASHER, A8.4
58	006576068	6	DISC, WASHER locking, VSF B8
59	007753027	4	BOLT, CARRIAGE, flat-round-head, M8 x 25
60	006267080	4	NUT, hex, M8 -8

094 IDLER PULLEYS, RIGHT

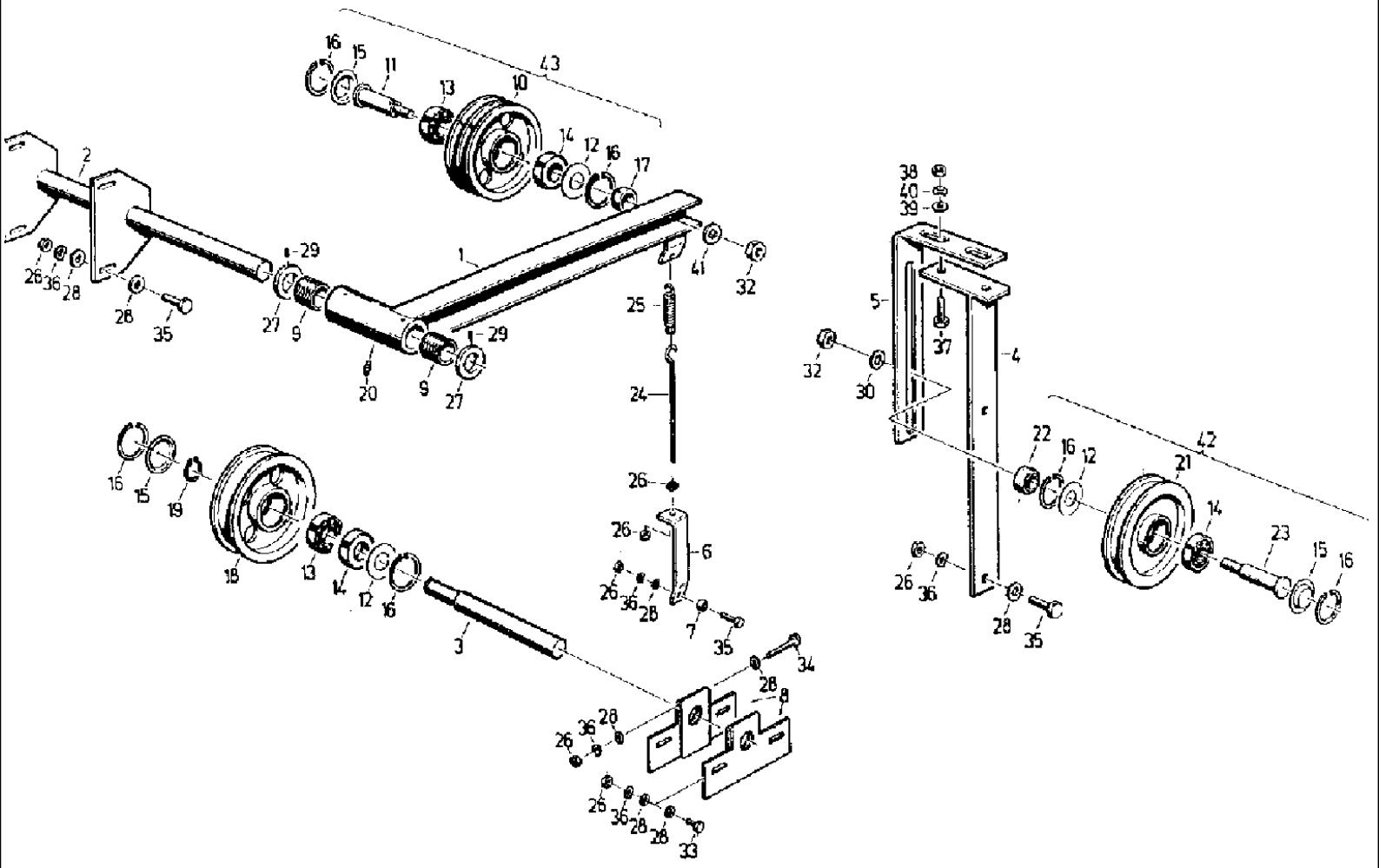

527 CASE IH COMBINE (1/98-12/98)

094 IDLER PULLEYS, RIGHT

Ref	Part Number	Qty	Description
1	061009033	1	DIPPER, lever
2	4270722180	1	BEARING,
3	4270722203	1	AXLE,
4	4260709601	1	CARRIER, support
5	4260696074	1	RAIL, BOW tensioning
6	061009371	1	SHIN, STIRRUP folding
7	061009388	1	BUSHING,
8	4270722590	2	CONNECTOR, TERMINAL, PIECE securing, front
9	020517718	2	RING, bush
10	4240022691	1	ROLLER, SHIFTER,
11	4240022675	1	AXLE,
12	4110085640	3	SEAL WASHER,
13	9902890400	2	BEARING, ball, 6204
14	9902890642	3	BEARING, ball, 6204 RS
15	9904868931	3	COVER, 47
16	9964917770	6	CIRCLIP, 47 x 1.6
17	4240022683	1	BUSHING,
18	4221607780	1	ROLLER, SHIFTER,
19	9964917168	1	NUT, RING snap, 20 x 1. 2
20	003617056	2	NIPPLE, LUBE, AM 8 x 1
21	4250125212	1	ROLLER, SHIFTER,
22	4250125220	1	BUSHING,
23	9949865572	1	PIN, LARGE, BOLT
24	9953928735	1	SCREW, eyelet
25	061005392	1	SPRING, TENSION,
26	006213830	15	NUT, hex, M 8 -8
27	060525341	2	RING, LOCKING, adjusting, A28
28	4260689114	23	WASHER,
29	003784502	2	PIN, thread plug, M8 x 10 - 45 H
30	9999853174	1	PLATE, LOCKING, WASHER, VSF B 12
32	006214140	2	NUT, hex, M12 -8
33	9933930001	4	SCREW, hex, M8 x 20 -8.8
34	9932930478	2	SCREW, hex, M8 x 60 -8.8
35	9933959415	5	SCREW, hex, M8 x 22 -8.8
36	9961920061	13	WASHER, SPRING, SPARING plate, B 10.5
37	9933931180	2	SCREW, hex, M10 x 35 -8.8
38	006213935	2	NUT, hex, M10 -8
39	4221620616	2	WASHER,
40	9961920004	2	WASHER, SPRING, B10.5 -St
41	9999853174	1	PLATE, LOCKING, WASHER, VSF B 12
42	020797274	1	TIGHTENER SHEAVE, PULLEY tension
43	4240022706	1	TIGHTENER SHEAVE, PULLEY tension

096 MOWER INTERMEDIATE SHAFT

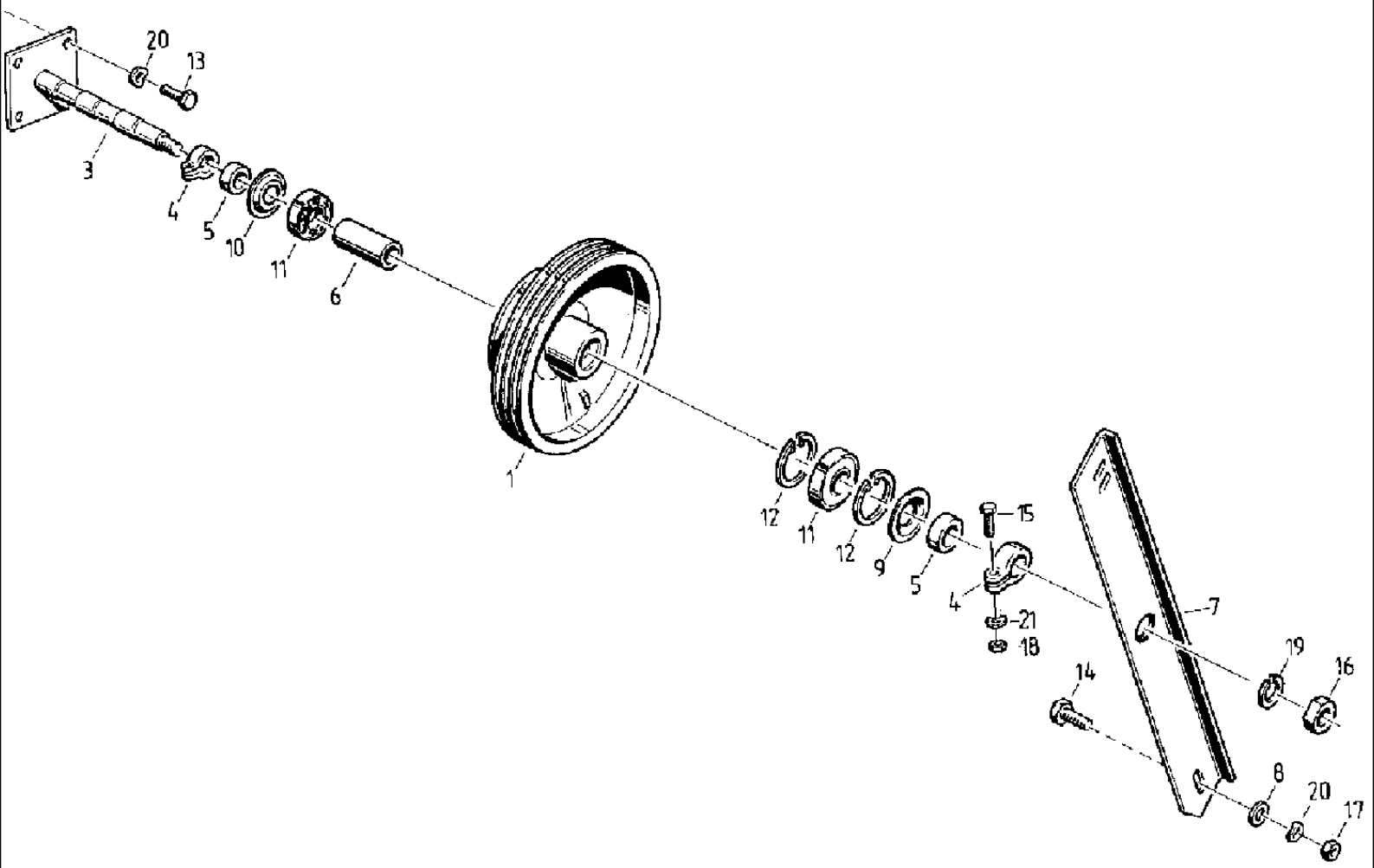

527 CASE IH COMBINE (1/98-12/98)

096 MOWER INTERMEDIATE SHAFT

Ref	Part Number	Qty	Description
1	4270721411	1	PULLEY,
3	4270721403	1	PIN, LARGE, axle
4	4270721428	2	CLAMP,
5	4270721444	2	BUSHING,
6	4270721436	1	BUSHING,
7	4270721637	1	SUPPORT,
8	4250132814	1	WASHER,
9	4270721452	1	SEAL WASHER,
10	9964965101	1	WASHER, SEALING, AS 35
11	9902890505	2	BEARING, grooved ball, 6207-RS
12	9964917826	2	CIRCLIP, 72 x 2.5
13	006346666	4	SCREW, hexagon, M12 x 30 -8.8
14	9933931863	1	SCREW, hexagon, M12 x 25 -8.8
15	006341397	2	SCREW, hexagon, M8 x 30 -8.8
16	9950897617	1	NUT, hex, M20 -8
17	006214140	1	NUT, hex, M12 -8
18	006213830	2	NUT, hex, M8 -8
19	060504601	1	SNAP RING, WASHER locking, VSK 20
20	006501557	5	WASHER, SPRING, B12
21	9961920061	2	WASHER, SPRING, B8

097 UNLOADING AUGER INTERM. SHAFT

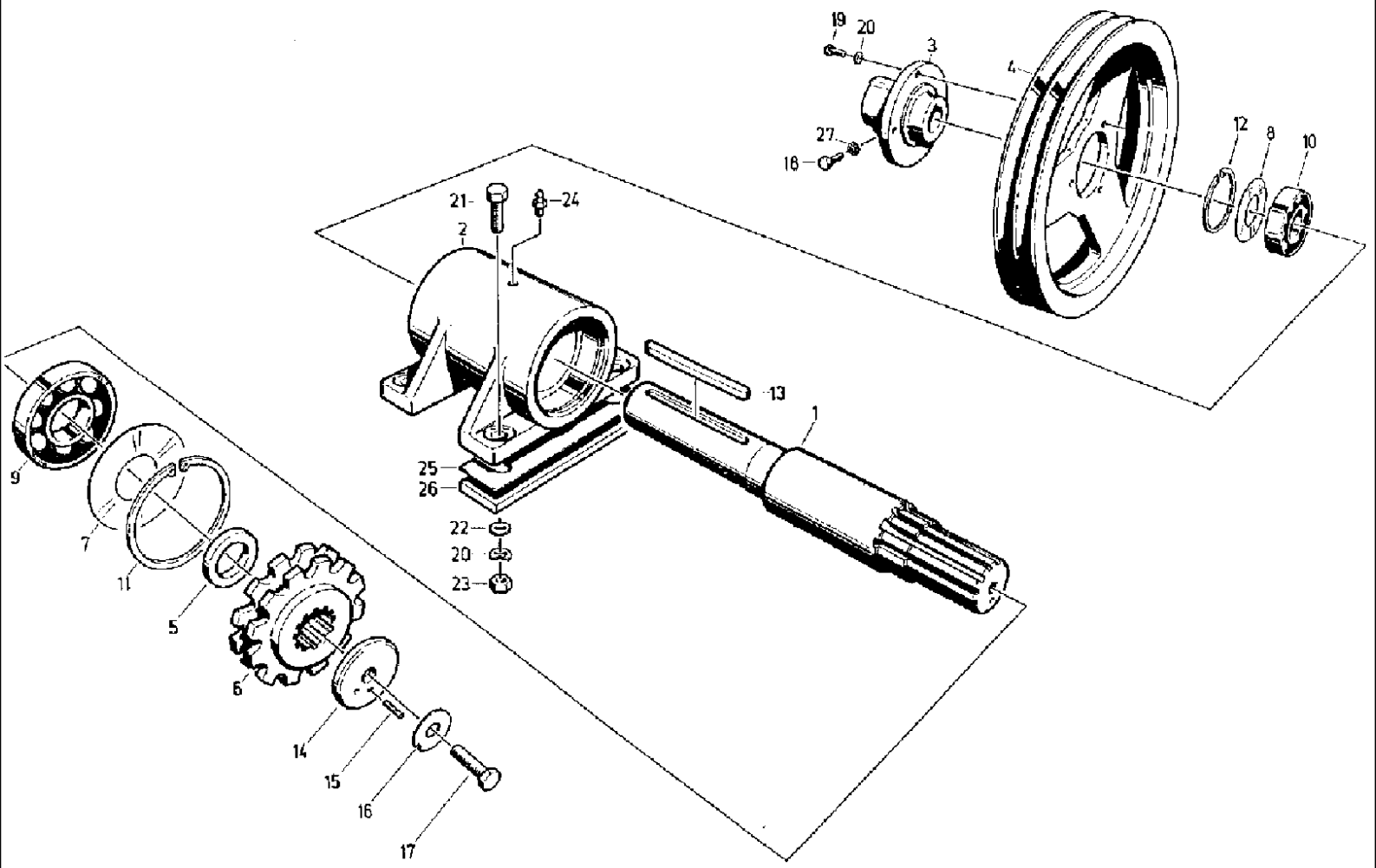

527 CASE IH COMBINE (1/98-12/98)

097 UNLOADING AUGER INTERM. SHAFT

Ref	Part Number	Qty	Description
1	4270717794	1	SHAFT,
2	4270717817	1	SUPPORT, BRACKET bearing
3	4270717833	1	HUB,
4	4270717825	1	VANEUM GAUGE, PULLEY v-belt
5	4270717800	1	RING,
6	4260690470	1	DRIVE SPROCKET, wheel
7	4221615194	1	SEAL WASHER,
8	4221607217	1	SEAL WASHER,
9	9902890538	1	BEARING, ball, 6208 - RS
10	9902890490	1	BEARING, ball, 6207
11	006453267	1	CIRCLIP, 80 x 2.5
12	9964917826	1	CIRCLIP, 72 x 2.5
13	9965956518	1	KEY, BUCKET TOOTHRT, feather, A10 x 8 x 100
14	9964919434	1	DISC, limit, D11 x 50
15	9967941944	1	PIN, slotted, 4 x 14
16	9962923594	1	PLATE, LOCKING, 10.5
17	9933931123	1	SCREW, hex, M10 x 30 -8.8
18	9933932108	1	SCREW, hex, M12 x 40 -8.8
19	006344037	3	SCREW, hex, M10 x 25 -8.8
20	9961920004	7	WASHER, SPRING, plate sparing, B10
21	9933931308	4	SCREW, hex, M10 x 45 -8.8
22	4221620616	4	WASHER,
23	006213935	4	NUT, hex, M10 -8
24	003617056	1	NIPPLE, LUBE, AM 8 x 1
25	4270721686	1	BLOCK,
26	060169354	4	PLATE,
27	9961924506	1	DISC, NOTCHED, toothed lock, A 12.5

098 CYLINDER INTERM. SHAFT

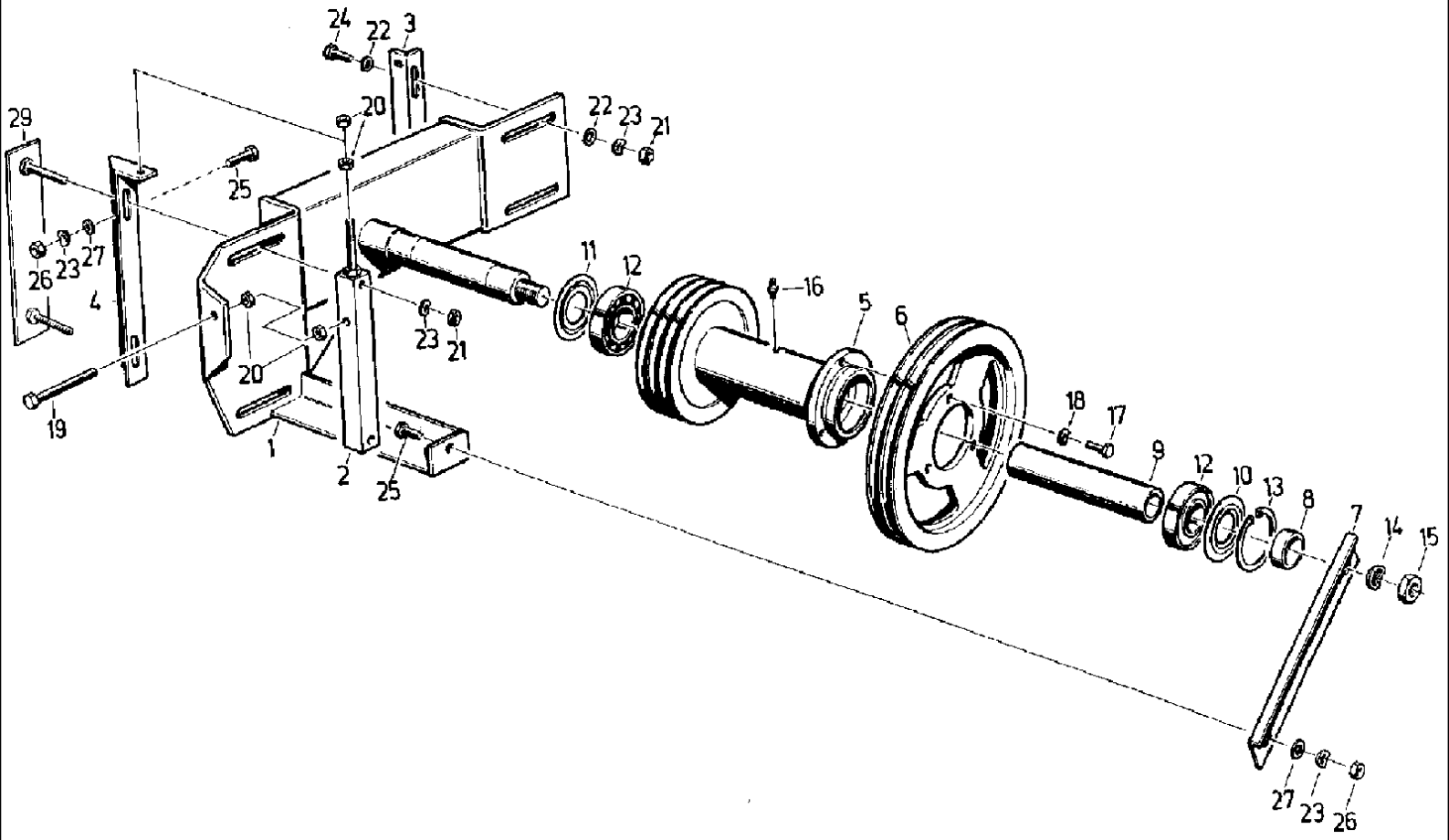

527 CASE IH COMBINE (1/98-12/98)

098 CYLINDER INTERM. SHAFT

Ref	Part Number	Qty	Description
1	061007007	1	SUPPORT, BRACKET bearing
2	061001436	1	SUPPORT, BLOCK tensioning
3	061006930	1	ANGLE BAR,
4	061001403	1	ANGLE, tension
5	061006955	1	FLANGE, WASHER
6	061006988	1	VANEUM GAUGE, PULLEY v-belt
7	061006922	1	SUPPORT,
8	060105202	1	SPACER,
9	061006996	1	BUSHING,
10	4270721452	1	SEAL WASHER,
11	9964965101	1	WASHER, SEALING, AS 35
12	9902890505	2	BEARING, ball, 6207-RS
13	9964917826	1	CIRCLIP, 72 x 2.5
14	006501581	1	WASHER, SPRING, B20
15	9950897617	1	NUT, hex, M20 -8
16	003617056	1	NIPPLE, LUBE, AM 8 x 1
17	006344037	3	SCREW, hex, M10 x 25 -8.8
18	9961920004	3	WASHER, SPRING, B10
19	9933931742	1	SCREW, hex, M10 x 100 -8.8
20	006213935	4	NUT, hex, M10 -8
21	006214140	4	NUT, hex, M12 -8
22	020947713	4	WASHER,
23	006501557	9	WASHER, SPRING, B12
24	9933932028	2	SCREW, hex, M12 x 35 -8.8
25	006346666	5	SCREW, hex, M12 x 30 -8.8
26	006214140	5	NUT, hex, M12 -8
27	4250132814	5	WASHER,
29	061031441	1	RETAINER,

099 SYMBOLS

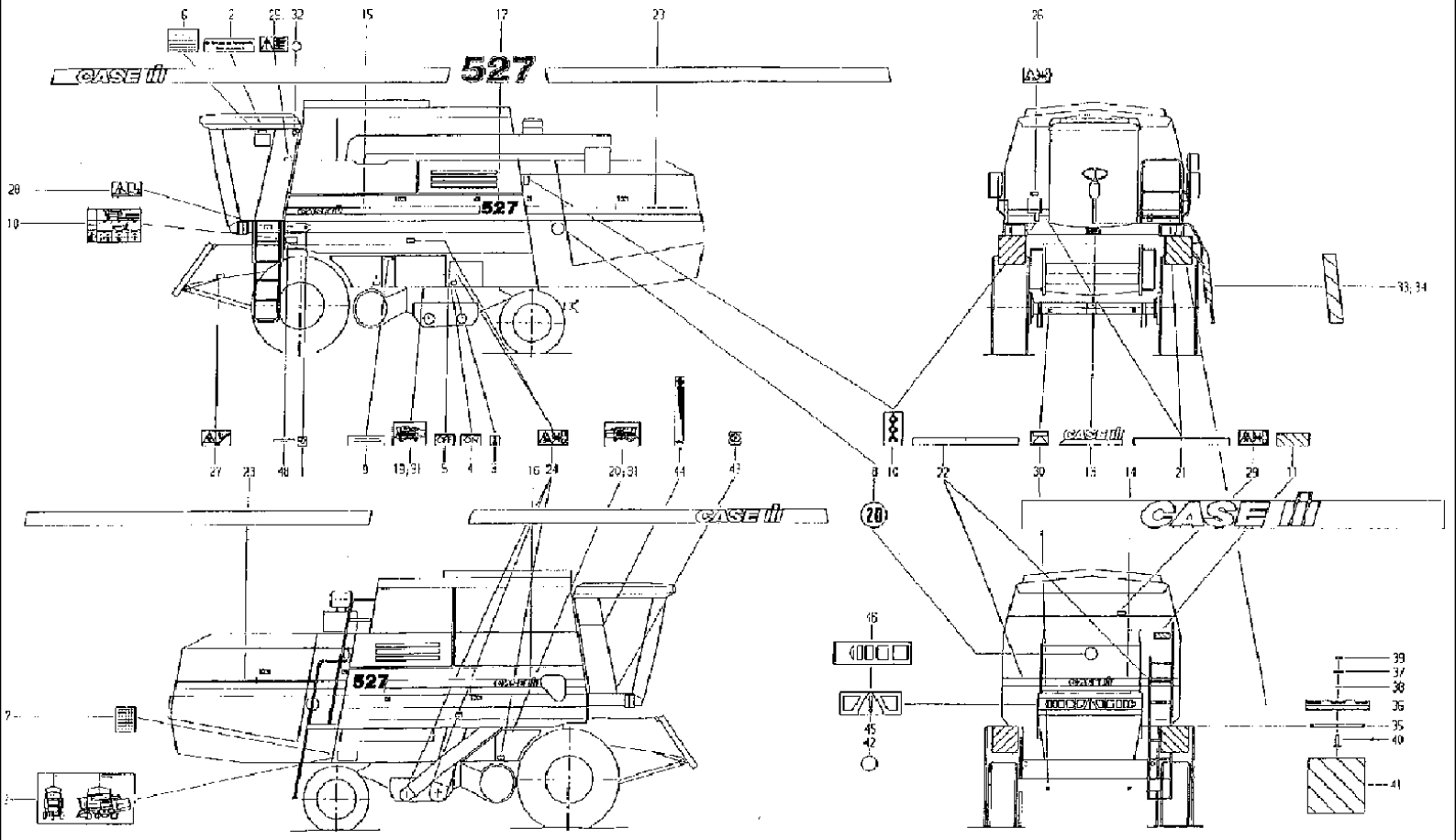
527
CASE IH
6
2
25, 32
15
17
23
26
28
10
33, 34
27
23
48
9
19,31
5
4
3
16
24
20,31
44
43
8
10
22
30
16
14
21
29
11
20
CASE IH
527
16
45
42
7
39
37
38
36
35
40
41

527 CASE IH COMBINE (1/98-12/98)

099 SYMBOLS

Ref	Part Number	Qty	Description
1	4250131202	1	PRODUCT GRAPHIC, LABEL adhesive, KV
2	4250132992	1	PRODUCT GRAPHIC, LABEL adhesive
3	4254135918	1	DECAL,
4	4260711411	1	DECAL, -on-
5	4260711428	1	DECAL, -off-
6	061024715	1	PRODUCT GRAPHIC, TABLE adjusting, 527
7	061031320	1	ADHESIVE, TABLE adjusting
8	060000202	3	DECAL, plate
9	060168394	1	ADHESIVE, SIGN information
10	009113301	4	SYMBOLS,
11	4260703950	1	PRODUCT GRAPHIC,
12	060126746	1	PRODUCT GRAPHIC, means
13	061052446	1	EMBLEM CASE/IH,
14	061052487	1	ADHESIVE, symbol
15	061052501	1	PRODUCT GRAPHIC,
16	061052518	1	PRODUCT GRAPHIC,
17	061052526	2	SYMBOLS, 527
18	061027701	1	PRODUCT GRAPHIC, PRESSURE tire
19	061031425	1	PRODUCT GRAPHIC, CHART lubricating
20	061031433	1	PRODUCT GRAPHIC, CHART lubricating
21	061052462	1	STRIP,
22	061052470	1	PRODUCT GRAPHIC, strip
23	061052495	2	STRIP,
24	060506652	6	DECAL, Nr. 21
25	060506660	1	DECAL, Nr. 1
26	060506677	1	ADHESIVE, symbol Nr. 15
27	060508381	2	PRODUCT GRAPHIC, Nr. 11
28	060508404	1	DECAL, Nr. 37
29	060510511	1	DECAL, Nr. 16
30	4221600067	4	DECAL, sliding shield
31	4221600083	83	PRODUCT GRAPHIC, sliding shield
32	4240050123	1	DECAL, prohibition sign
33	4260706672	1	DECAL, strip of foil
34	4260706680	1	DECAL, strip of foil
36	060203710	2	HINGE,
37	9961919927	18	WASHER, SPRING, B6
38	9964963985	14	WASHER, A6.4
39	006213734	18	NUT, hex, M6 -8
40	006338385	18	SCREW, hex, M6 x 16 -8.8
41	060526254	4	TAG, warning console
42	060527271	2	REFLECTOR, rear
43	061052671	1	SYMBOLS,
44	061052688	1	DECAL,
45	060000083	1	PRODUCT GRAPHIC, safety signs
46	061013681	2	DECAL, safety signs

Ref	Part Number	Qty	Description
48	061052366	1	ADHESIVE, information sign

101 FRAME

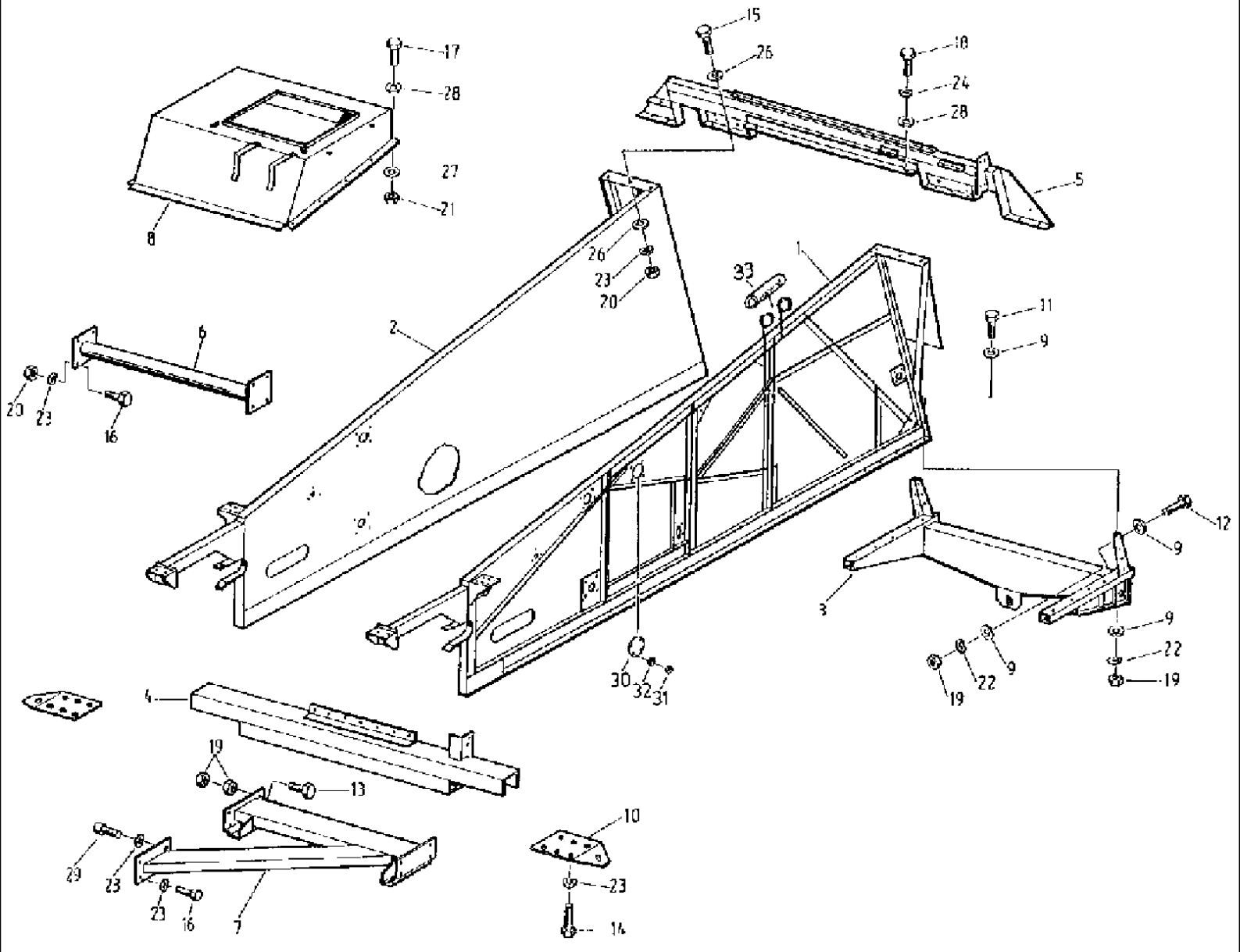
17
28
27
21
8
15
26
18
24
28
5
26
23
20
33
1
2
6
20
23
16
11
9
12
9
3
9
22
19
9
22
19
30
32
31
4
19
13
29
23
23
16
7
10
23
14

527 CASE IH COMBINE (1/98-12/98)

101 FRAME

Ref	Part Number	Qty	Description
1	061001001	1	SIDE-PLATE, wall, left side
2	061001018	1	SIDE-PLATE, wall, right side
3	061001805	1	SUPPORT, CARRIER steering
4	4270718223	1	CARRIER, MEMBER cross
5	4270718231	1	BRIDGE,
6	061001895	1	CROSSBAR, beam
7	4270718256	1	CROSSBAR, connection
8	061015972	1	HOOD, shaker
9	4221602872	30	WASHER,
10	4260700378	2	SUPPORT, back rest
11	9932959385	9	SCREW, hex, M12 x 80 -8.8
12	9933932028	6	SCREW, hex, M12 x 35 -8.8
13	006346666	8	SCREW, hex, M12 x 30 -8.8
14	9933931123	12	SCREW, hex, M10 x 30 -8.8
15	006344037	6	SCREW, hex, M10 x 25 -8.8
16	006343880	8	SCREW, hex, M10 x 22 -8.8
17	9933930001	8	SCREW, hex, M8 x 20 -8.8
18	006340781	8	SCREW, hex, M8 x 16 -8.8
19	006214140	31	NUT, hex, M12 -8
20	006213935	12	NUT, hex, M10 -8
21	006213830	8	NUT, hex, M8 -8
22	006501557	15	WASHER, SPRING, B12
23	9961920004	28	WASHER, SPRING, B10
24	9961920061	16	WASHER, SPRING, B8
26	9964962486	12	WASHER, B10.5
27	9964962783	8	WASHER, A8.4
28	9961921673	14	WASHER, R9
29	9937985317	2	SCREW, cylinder, M10 x 22 -10.9
30	4260692214	2	COVER,
31	006213734	4	NUT, hex, M6-8
32	060150770	4	PLATE, LOCKING, WASHER, VSF B6
33	061013745	2	FITTING, HOSE connecting

102 MOUNTING PARTS, FRAME

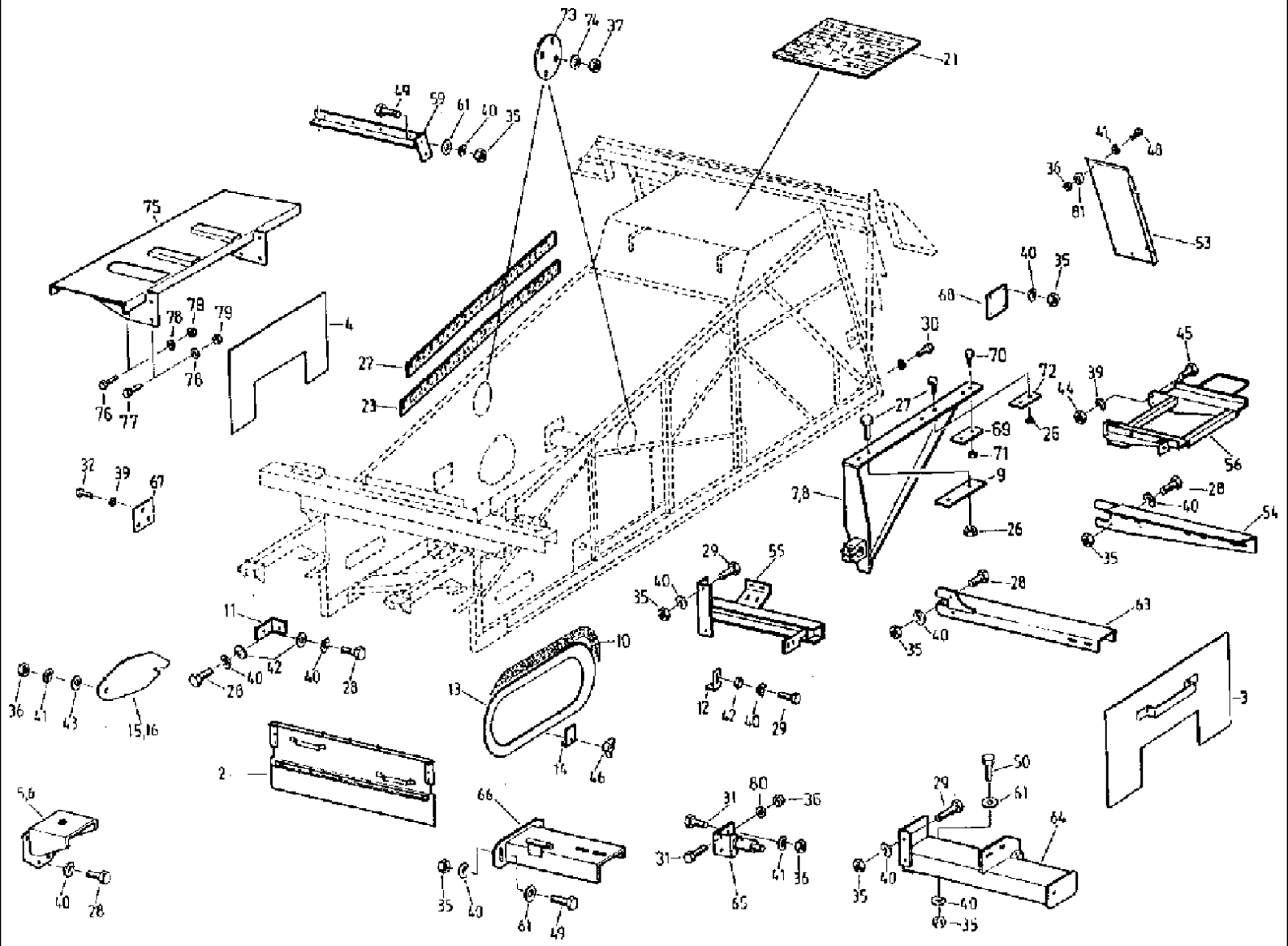

527 CASE IH COMBINE (1/98-12/98)

102 MOUNTING PARTS, FRAME

Ref	Part Number	Qty	Description
2	4270718328	1	FLAP, cylinder
3	061009958	1	COVER,
4	061009966	1	COVER,
5	4260700136	1	BEARING, left side
6	4260700144	1	BEARING, right side
7	061025925	1	SUPPORT, base bearing, left side
8	061025933	1	SUPPORT, base bearing, right side
9	060180591	4	BLOCK,
10	060205511	2	GASKET, packing
11	4260700193	2	SHIN, STRAP
12	060143417	2	BLANK-OFF PLUG, lock
13	4221602768	2	COVER,
14	4221602776	6	CLAMP, terminal
15	4221602960	1	COVER, left
16	4221602977	1	COVER, right side
21	061015964	1	MAT, rubber
22	4260700257	1	BAND,
23	4260700265	1	BAND,
26	9999850895	10	NUT, verbus, M12-10
27	9999850887	10	SCREW, verbus, M12 x 35 -100 W 158.12
28	9933929065	16	SCREW, hex, M10 x 20 -8.8
29	006343880	6	SCREW, hex, M10 x 22 -8.8
30	9933930887	2	SCREW, hex, M10 x 16 -8.8
31	9933930001	4	SCREW, hex, M8 x 20 -8.8
32	006346408	3	SCREW, hex, M12 x 20 -8.8
35	006213935	20	NUT, hex, M10 -8
36	006213830	9	NUT, hex, M8 -8
37	006213734	8	NUT, hex, M6 -8
39	006501557	7	WASHER, SPRING, B12
40	9961920004	32	WASHER, SPRING, B10
41	9961920061	9	WASHER, SPRING, B8
42	9964962486	6	WASHER, B10.5
43	9964962783	2	WASHER, B8.4
44	9950896310	4	NUT, hex, M12 -10
45	006348186	4	SCREW, hex, M12 x 22 -10.9
46	9951893790	6	NUT, WING, M8
48	9933929803	3	SCREW, hex, M8 x 14 -8.8
49	006344037	4	SCREW, hex, M10 x 25 -8.8
53	4260706978	1	COVER, PROTECTIVE,
54	4270718578	1	ARM,
55	4270718377	1	ARM, supporting
56	4260702982	1	FRAME,
59	4270718385	1	ARM,
60	4270718393	1	SUPPORT, side bracket
61	4221620616	6	WASHER,

527 CASE IH COMBINE (1/98-12/98)

102 MOUNTING PARTS, FRAME

Ref	Part Number	Qty	Description
62	4221602872	1	WASHER,
63	061034050	1	BRACKET, HOLDER roll
64	4270718272	1	CROSSBAR,
65	4270718280	1	SUPPORT, COMPONENT holding
66	4270718297	1	SUPPORT, COMPONENT holding
67	4270718473	1	COVER, PROTECTIVE,
68	060103475	1	PLATE, LARGE, cover
69	060180792	2	BLOCK,
70	9999850766	2	SCREW, verbus-tensilock, M16 x 40 -100
71	9999850782	2	NUT, verbus-tensilock, M16 -10
72	4260700177	2	PLATE, SHIM
73	4260692214	2	COVER,
74	060150770	8	PLATE, LOCKING, WASHER, VSF B 6
75	061027574	1	TANK, SURFACE bearing
76	006346666	6	SCREW, hex, M12 x 30 -8.8
77	006346787	2	SCREW, hex, M12 x 35 -8.8
78	9999853174	8	PLATE, LOCKING, WASHER, VSF B 12
79	006214140	8	NUT, hex, M12 -8
80	9999853158	4	PLATE, LOCKING, WASHER, VSF B 8
81	9960921633	5	WASHER, A8.4

104 OUTLET HOOD, REAR LADDER

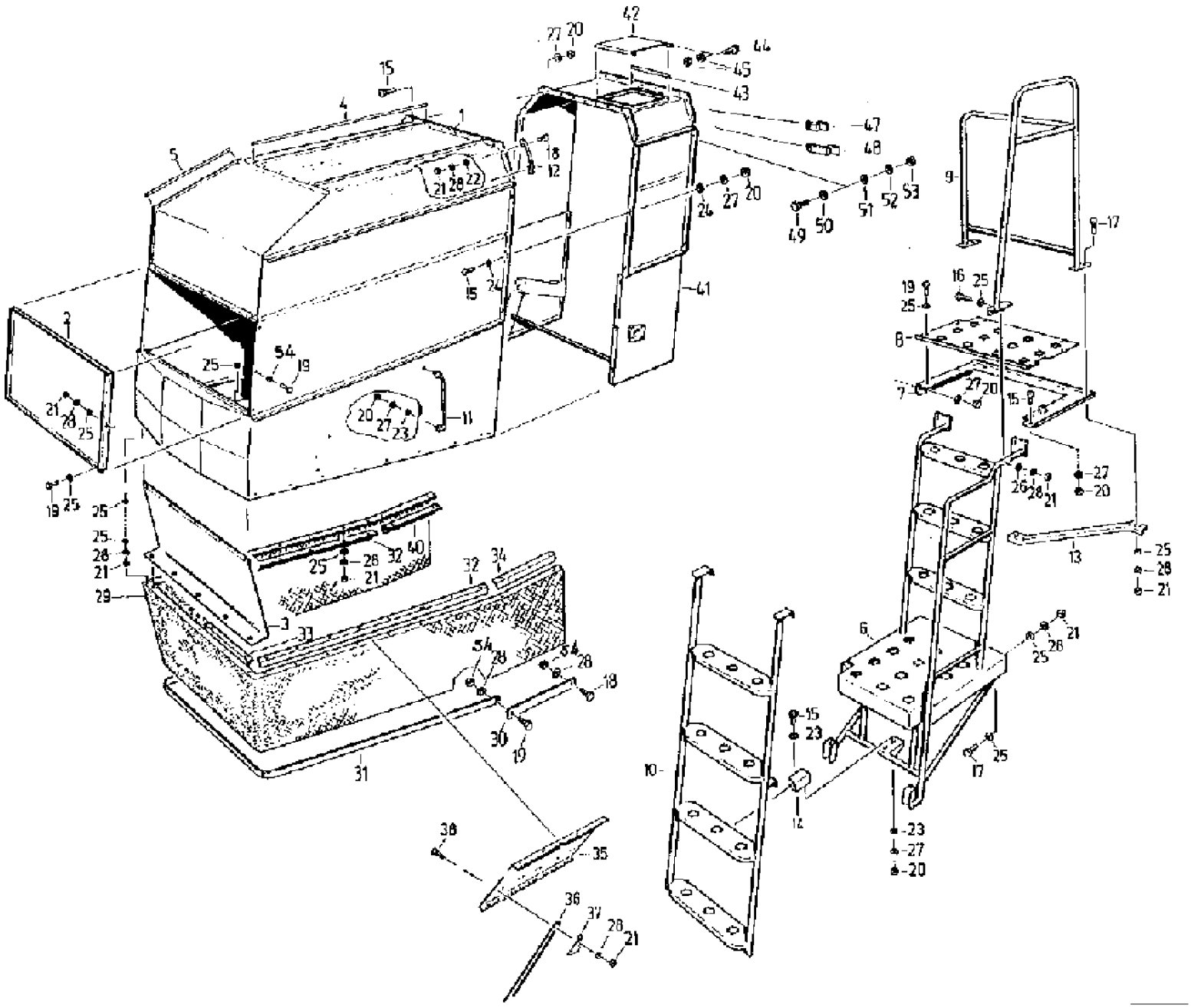

527 CASE IH COMBINE (1/98-12/98)

104 OUTLET HOOD, REAR LADDER

Ref	Part Number	Qty	Description
1	060119730	1	COWL, hoop
2	060119763	1	FLAP, rear
3	060119747	1	COVER, PROTECTIVE,
4	060153347	2	STRIP, PROTECTION,
5	060153355	2	STRIP, PROTECTION,
6	4260706793	1	LADDER, part
7	4270720507	1	FRAME,
8	4270720515	1	STEP,
9	4270720492	1	GRIP,
10	4260706808	1	LADDER,
11	4260706816	1	RAMP, handrail
12	4260695924	1	GRIP,
13	4270720523	1	ANGLE BAR,
14	4032804250	1	BLANK-OFF PLUG, lock
15	006344037	37	SCREW, hex, M10 x 25 -8.8
16	006334131	1	SCREW, hex, M8 x 45 -8.8
17	9933929173	11	SCREW, hex, M8 x 25 -8.8
18	9933959415	26	SCREW, hex, M8 x 22 -8.8
19	9933929715	25	SCREW, hex, M8 x 18 -8.8
20	006213935	32	NUT, hex, M10 -8
21	006213830	61	NUT, hex, M8 -8
22	4260689114	15	WASHER,
23	9964962486	6	WASHER, B10.5
24	4221620616	36	WASHER,
25	9964962783	62	WASHER, B8.4
26	9960919831	1	WASHER, 9
27	9961920004	11	WASHER, SPRING, B10
28	9961920061	69	WASHER, SPRING, B8
29	061052622	1	CANVAS,
30	4270719240	2	RAIL, bar
31	4270719257	1	BOW,
32	4260696195	2	ANGLE BAR,
33	061016506	1	ANGLE BAR,
34	4270719273	1	ANGLE BAR,
35	4260696162	1	PROTECTION PLATE, chute
36	4254122962	5	SPRING, forked
37	4254122954	5	FASTENER, clamp
38	9938927991	5	SCREW, lens, M8 x 20 -5.8
39	006213830	5	NUT, hex, M8 -8
40	4270719265	1	ANGLE BAR,
41	060120275	1	COWL, hoop
42	061005167	1	COVER,
43	060155164	4	STRIP, PROTECTION, edge
44	9930977163	2	SCREW, hex, M6 x 20 -8.8
45	006213734	4	NUT, hex, M6 -8

104 OUTLET HOOD, REAR LADDER

Ref	Part Number	Qty	Description
45	006213734	4	NUT, hex. M6 -8
46	061016514	1	ANGLE BAR,
47	060120187	1	SHIN, PLATE fish
48	060120195	1	SHIN, PLATE fish
49	9933932028	6	SCREW, hex, M12 x 35 -8.8
50	9960964555	6	WASHER, 13
51	003794690	6	WASHER, 13 -ST
52	9999853125	6	PLATE, LOCKING, WASHER, VSF M12
53	006214157	6	NUT, hex, M12 -8
54	003794537	4	NUT, hex, VM 8 -8

106 COWLING, LEFT

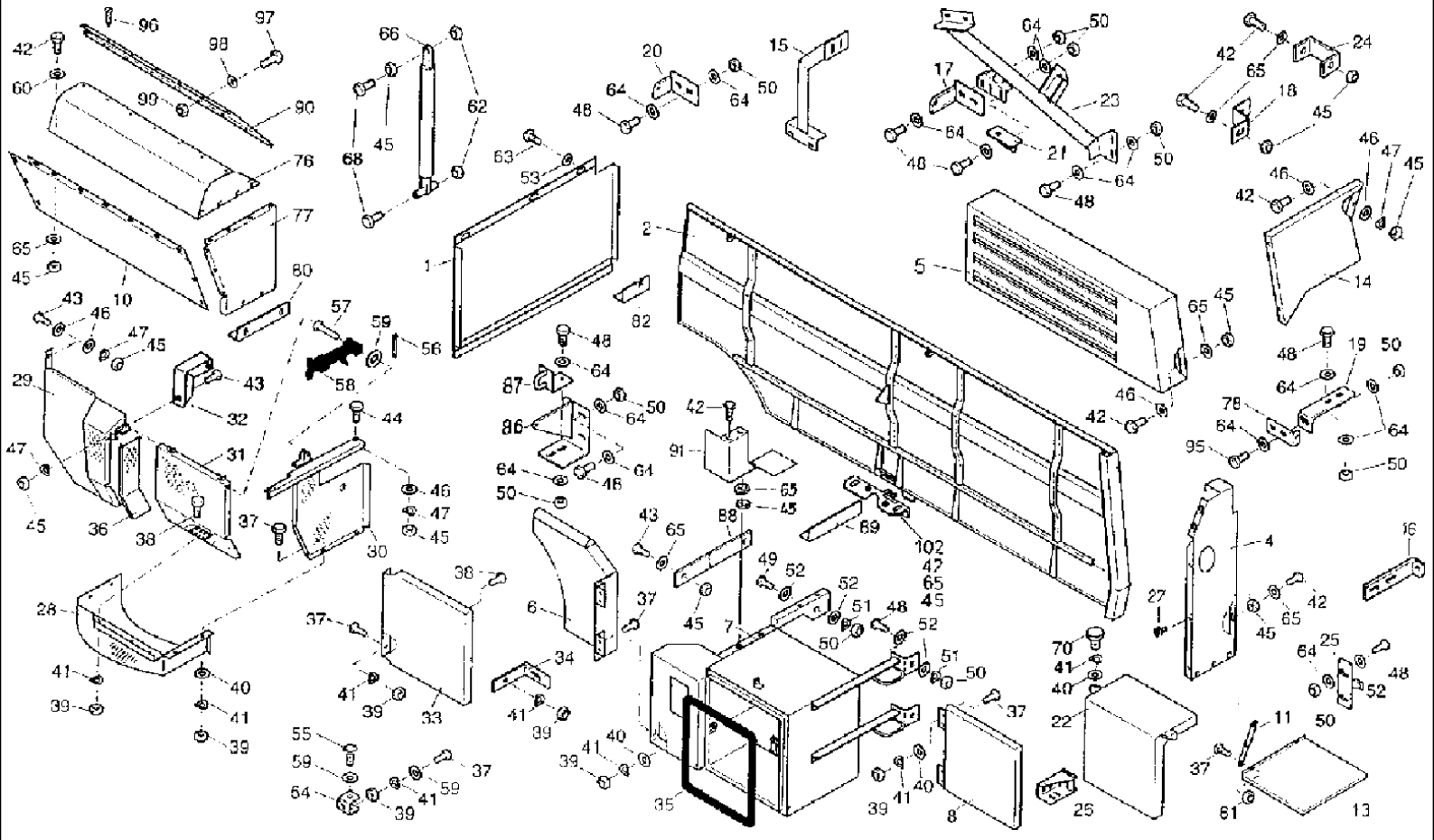

527 CASE IH COMBINE (1/98-12/98)

106 COWLING, LEFT

Ref	Part Number	Qty	Description
1	061052220	1	PARTITION, front, left hand
2	061018331	1	PANEL, SIDE, hinged, left hand
4	061028085	1	WALL,
5	061050950	1	SHROUD ASSY., COWLING engine
6	061051084	1	COVER, flap
7	060152596	1	BOX, tool
8	4260709458	1	PANEL, SIDE, lateral
10	061022102	1	COVER, PROTECTIVE, SCREEN
11	4260703411	2	SUPPORT,
13	4260709466	1	FLAP,
14	4270719810	1	DIVIDER, part of rear wall
15	061027043	1	SUPPORT,
16	061029375	1	STAY, strud
17	061020680	2	HOLDER, trestle
18	061051027	1	STAY, BRACE
19	4260707858	1	ANGLE BAR,
20	061020711	1	ANCHOR, fastening
21	061052591	1	ANGLE BAR,
22	061004125	1	COVER,
23	4270719868	1	RETAINER,
24	061051010	1	STAY, bow
25	4240028213	2	SUPPORT, mount
26	4032804250	2	BLANK-OFF PLUG, closure
27	0030670468	5	BUMPER, PIECE stop
28	4270719956	1	PAN, left hand
29	4270720000	1	PANEL, SIDE, guard, left hand
30	4270719964	1	COVER, rear panel, left hand
31	4270719972	1	FLAP,
32	060069078	1	ANGLE BAR,
33	4270719915	1	GUARD, left hanad
34	4260709208	2	ANGLE BAR,
35	4260709425	1	RUBBER SEAL,
36	4270722822	1	PARTITION, front
37	006338385	18	SCREW, hex, M6 x 16 -8.8
38	9933958584	8	SCREW, hex, M6 x 18 -8.8
39	006213734	26	NUT, hex, M6 -8
40	006510228	16	WASHER, B6 -4
41	9961919927	27	WASHER, SPRING, B6
42	006340781	41	SCREW, hex, M8 x 16 -8.8
43	9933930001	5	SCREW, hex, M8 x 20 -8.8
44	9933929173	3	SCREW, hex, M8 x 25 -8.8
45	006213830	52	NUT, hex, M8 -8
46	4260689114	22	WASHER,
47	9961920061	23	WASHER, SPRING, B8
48	006344037	25	SCREW, hex, M10 x 25 -8.8

527 CASE IH COMBINE (1/98-12/98)

106 COWLING, LEFT

Ref	Part Number	Qty	Description
49	9933931478	2	SCREW, hex, M10 x 70 -8.8
50	006213935	25	NUT, hex, M10 -8
51	9961920004	25	WASHER, SPRING, B10
52	9964962486	50	WASHER, B10.5
53	060150770	3	PLATE, LOCKING, WASHER, VSF B 6
54	9972879345	1	BUFFER, RUBBER, FOOT
55	9938927766	1	SCREW, fillister-head, M6 x 35 -5.8
56	9963949600	2	PIN, SPLIT (COTTER), 1.6 x 10
57	006436908	2	PIN, LARGE, BOLT, B 6h 11 x 40
58	9972884592	2	FASTENER, hood, 3
59	006510927	3	WASHER, A6 -4
60	9964962783	20	WASHER, B8 -4
61	006267111	4	NUT, hex, M6 -8
62	006267080	4	NUT, hex, M8 -8
63	060502825	3	SCREW, raised cheese head, M6 x 20 -4.8
64	9999853166	38	PLATE, LOCKING, WASHER, VSF B10
65	9999853158	34	PLATE, LOCKING, WASHER, VSF B8
66	060509317	1	SPRING, gas, B1B1-45-350-800/850 N
68	9933930331	2	SCREW, hex, M8 x 40 -8.8
69	9960921633	3	WASHER, A8.4
70	060501631	2	SCREW, knurled, M6 x 12
71	060506074	1	SCREW, raised cheese head, M5 x 35 -4.8
72	9961919902	1	WASHER, SPRING, B5
73	006213478	1	NUT, hex, M5 -8
76	061022127	1	CLAMP, upper part
77	061022102	1	COVER, PROTECTIVE, screen
78	061020736	1	ANCHOR, fastening
80	061024610	1	ANGLE BAR,
82	060152635	1	ANGLE BAR,
84	061024530	1	RETAINER,
86	061027951	1	SUPPORT,
87	060184257	1	SUPPORT, holding component
88	061028036	1	STAY, BRACE
89	061028077	1	ANGLE BAR,
90	060180696	1	DEFLECTOR, PLATE guiding
91	061029205	1	PROTECTOR,
95	9933931180	3	SCREW, hex, M 10 x 35 -8.8
96	9937939088	7	SCREW, metal, 4.8 x 13
97	006338385	9	SCREW, hex, M 6 x 16 -8.8
98	006576010	9	WASHER, locking, VSF M 6
99	006213734	9	NUT, hex, M 6 -8
100	061034018	1	STAY, BRACE
101	006382307	1	SCREW, plate, ST 4.8 x 19
102	060508830	1	LOCK ASSY,

109 COWLING, RIGHT

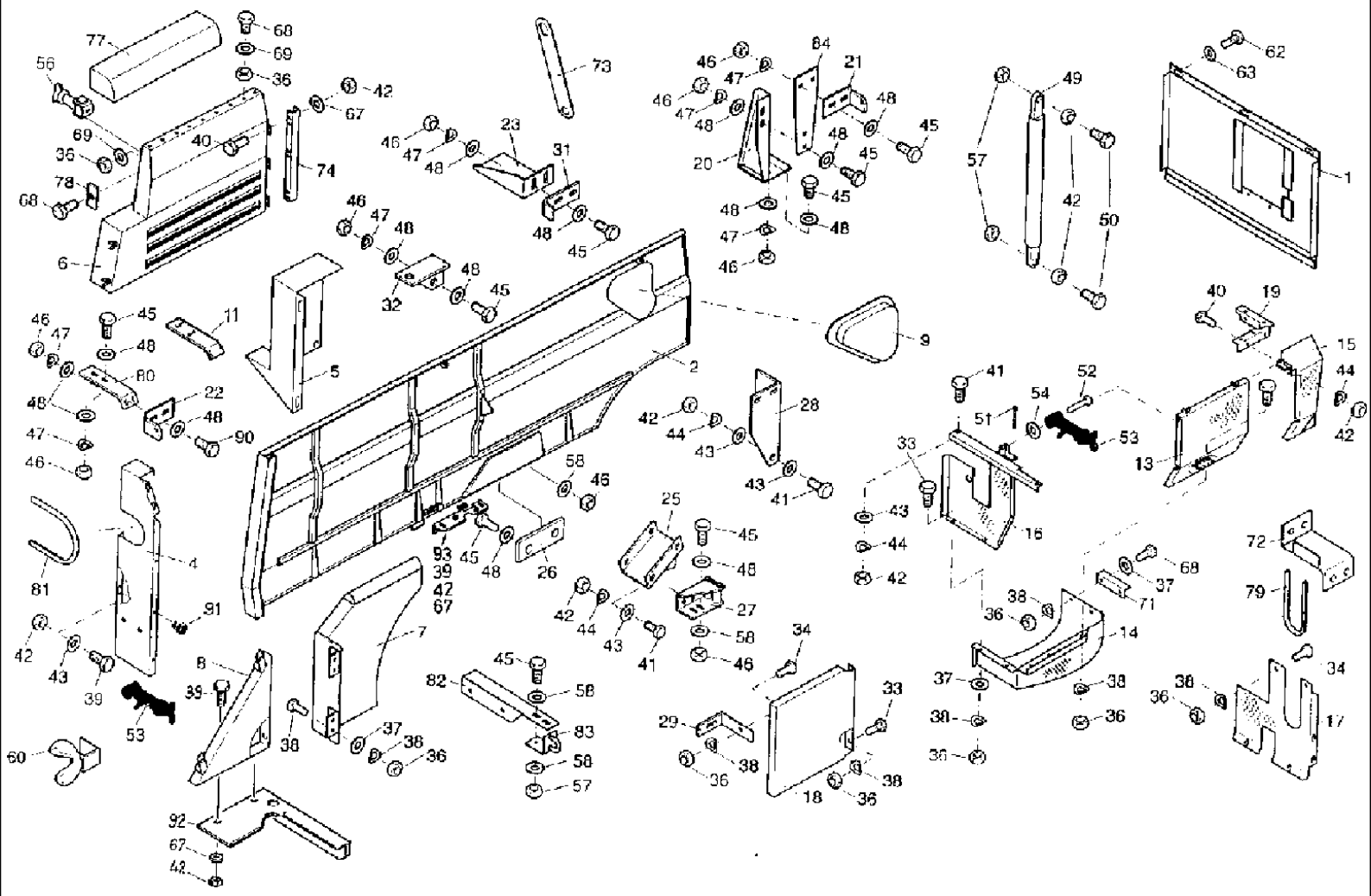

527 CASE IH COMBINE (1/98-12/98)

109 COWLING, RIGHT

Ref	Part Number	Qty	Description
1	061023015	1	PARTITION, front
2	061018524	1	PANEL, SIDE, hinged, g
4	061028093	1	WALL, PANEL rear
5	4270719771	1	DIVIDER, part of rear wall
6	061051107	1	SUPPORT, COWL radiator
7	061051092	1	COVER, flap g
8	4260695643	1	SIDE-PLATE, wall g
9	060118738	1	COWL, hood
10	061008651	1	BOW,
11	061029383	1	SHIN, strap
13	4270719972	1	FLAP,
14	061016338	1	PAN, g
15	061022713	1	PANEL, SIDE, guard, g
16	061022473	1	COVER, WALL rear, g
17	061007980	1	PARTITION, front panel
18	4270719923	1	GUARD, g
19	061022658	1	RETAINER,
20	4270719827	1	RETAINER,
21	061020711	1	ANCHOR, fastening
22	061020736	1	ANCHOR, fastening
23	4270719843	1	RETAINER,
25	4270719851	1	RETAINER,
26	4240028213	2	SUPPORT, mount
27	4032804250	1	BLANK-OFF PLUG, closure
28	4260715263	2	RETAINER, holder
29	4260709208	2	ANGLE BAR,
31	061020680	1	HOLDER, trestle
32	4260695772	1	ANGLE BAR,
33	006338385	12	SCREW, hex, M 6 x 16 -8.8
34	9933958584	11	SCREW, hex, M 6 x 18 -8.8
36	006213734	34	NUT, hex, M 6 -8
37	006510228	15	WASHER, B 6,4
38	9961919927	25	WASHER, SPRING, B 6
39	006340781	12	SCREW, hex, M 8 x 16 -8.8
40	9933930001	19	SCREW, hex, M 8 x 20 -8.8
41	9933929173	8	SCREW, hex, M 8 x 25 -8.8
42	006213830	38	NUT, hex, M 8 -8
43	4260689114	17	WASHER,
44	9961920061	21	WASHER, SPRING, B 8
45	006344037	20	SCREW, hex, M 10 x 25 -8.8
46	006213935	20	NUT, hex, M 10 -8
47	9961920004	20	WASHER, SPRING, B 10
48	9964962486	40	WASHER, B 10.5
49	060509317	1	SPRING, gas, B1B1 45-350-800/850 N
50	9933930331	2	SCREW, hex, M 8 x 40 -8.8

527 CASE IH COMBINE (1/98-12/98)

109 COWLING, RIGHT

Ref	Part Number	Qty	Description
51	9963949600	2	PIN, SPLIT (COTTER), 1.6 x 10
52	006436908	2	PIN, LARGE, bolt, B6 h11 x 40
53	9972884592	2	FASTENER, holder hood 3
54	006510927	2	WASHER, A 6.4
56	061024723	1	FOOT,
57	006267080	3	NUT, hex, M 10 -8
58	9999853166	8	PLATE, LOCKING, washer, VSF B 10
59	9960921633	4	WASHER, A 8.4
60	4270722896	2	RETAINER,
62	060502825	3	SCREW, cheese head, M 6 x 20 -4.8
63	060150770	3	PLATE, LOCKING, washer, VSF B 6
64	060506074	1	SCREW, cheese head, M 5 x 35 -4.8
65	9961919902	1	WASHER, SPRING, B 5
66	006213478	1	NUT, hex, M 5 -8
67	9999853158	17	PLATE, LOCKING, washer, VSF B 8
68	9933929651	13	SCREW, hex, M 6 x 14 -8.8
69	060150770	9	PLATE, LOCKING, washer, VSF B 6
71	061022617	1	ANGLE, holding
72	061016588	1	CLAMP, upper part
73	061024040	1	STAY, strud
74	061020543	1	SUPPORT,
77	061022207	1	PROTECTOR, upper part
78	061024731	1	BLOCK, underlay
79	061024756	1	PROFILE,
80	4260707858	1	ANGLE BAR,
81	061028060	1	STRIP, PROTECTION,
82	061028011	1	ANGLE BAR,
83	060184257	1	SUPPORT, COMPONENT holding
84	061020816	1	RETAINER, holder
90	9933931180	1	SCREW, hex, M 10 x 35 -8.8
91	0030670468	5	BUMPER, stop piece
92	061029213	1	PROTECTOR,
93	060508830	1	LOCK ASSY,

112 STEERING AXLE, RIGID

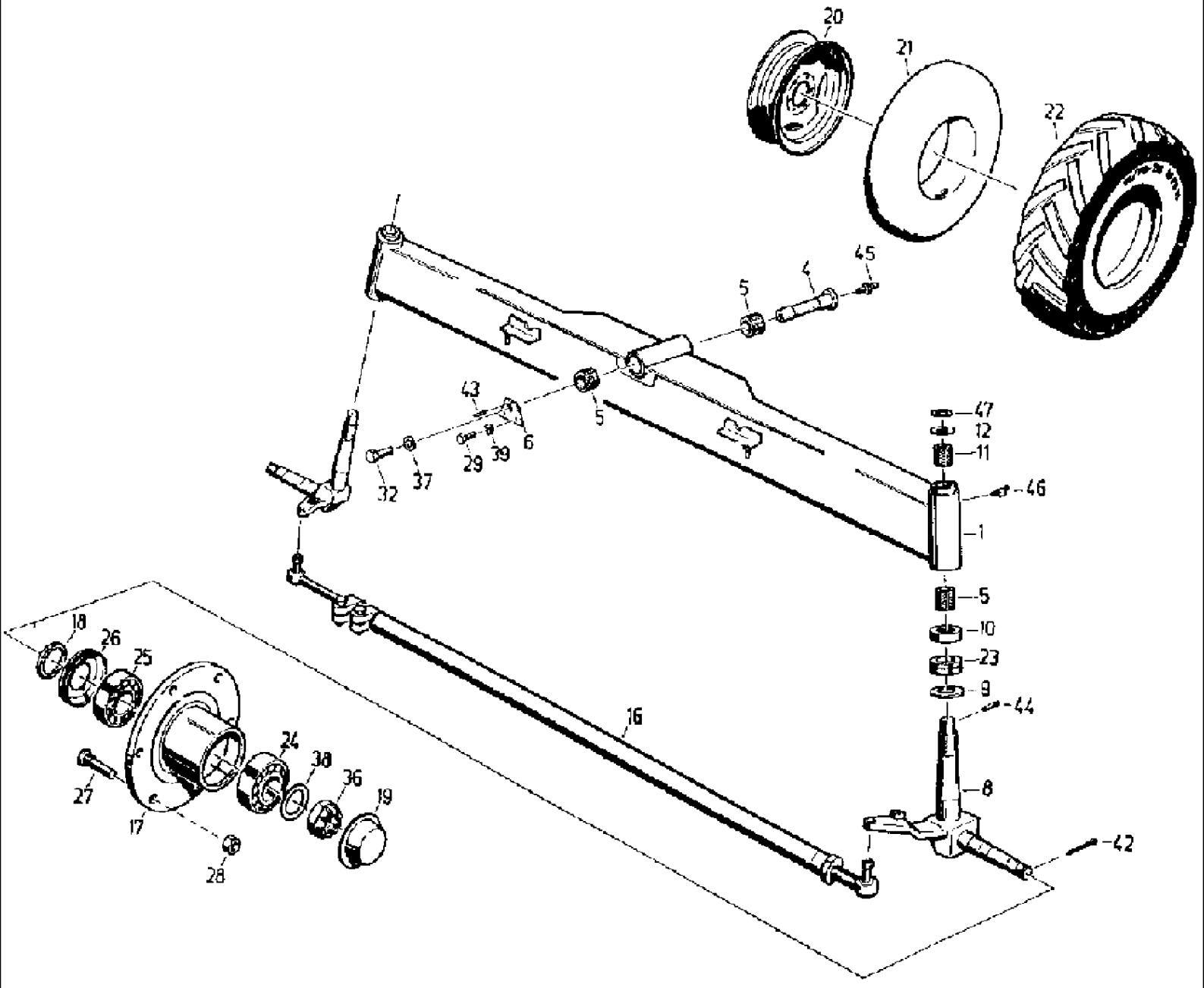

527 CASE IH COMBINE (1/98-12/98)

112 STEERING AXLE, RIGID

Ref	Part Number	Qty	Description
1	061050372	1	SUPPORT, AXLE,
4	061031843	1	STUD, BOLT steered axle
5	061024748	4	BUSHING,
6	061031851	1	PLATE, LOCKING,
7	061004238	1	LEVER, ARM steering, g
8	061004334	1	KNUCKLE, STEERING, arm, f
9	061004141	2	WASHER,
10	4221609694	2	COVER,
11	4221609485	2	BUSHING,
12	061004158	2	WASHER,
16	061050516	1	TIE ROD, track
17	4240046690	2	HUB, wheel
18	060104347	2	RING, ring
19	001312805	2	CAP, hub
20	061004422	2	RIM, disk wheel, 14 x 20 G -85
21	001401701	2	AIR TUBE, inner, 16 - 20
22	061018967	2	TIRE, RUBBER, 16/70 - 20 10PR
23	9902888133	2	BEARING, BALL, 51112
24	9902888551	2	BEARING, ROLLER, taper, 32208
25	9902888736	2	BEARING, ROLLER, taper, 32212
26	060501422	2	PLASTIC RING,
27	9929902308	16	RHEOSTAT, BOLT wheel, AM 20 x 1.5 x 50
28	060501488	16	NUT, wheel, A 20 -8
29	006344037	2	SCREW, hex, M 10 x 25 -8.8
32	9935958180	1	SCREW, hex, M 20 x 1.5 x 45 -10.9
36	060501430	2	NUT, castle, M 30 2 - 17H
37	9962923721	1	WASHER, 21
38	060502183	2	WASHER, 31
39	9961920004	2	WASHER, SPRING, SPARING plate, B 10
42	9963950651	2	PIN, SPLIT (COTTER), 6.3 x 56
43	9967943833	1	PIN, grooved, 10 x 20
44	9967943794	2	PIN, cylindrical slotted, 10 x 50
45	003617056	1	NIPPLE, LUBE, AM 8 x 1
46	9920925515	4	NIPPLE, LUBE, BM 8 x 1
47	9965920861		SHIM, precision, n.B., 32 x 45 x 1
47	060504216		SHIM, precision, n.B., 32 x 45 x 1.5
47	9965920925		SHIM, precision, n.B., 32 x 45 x 2

113 STEERING AXLE

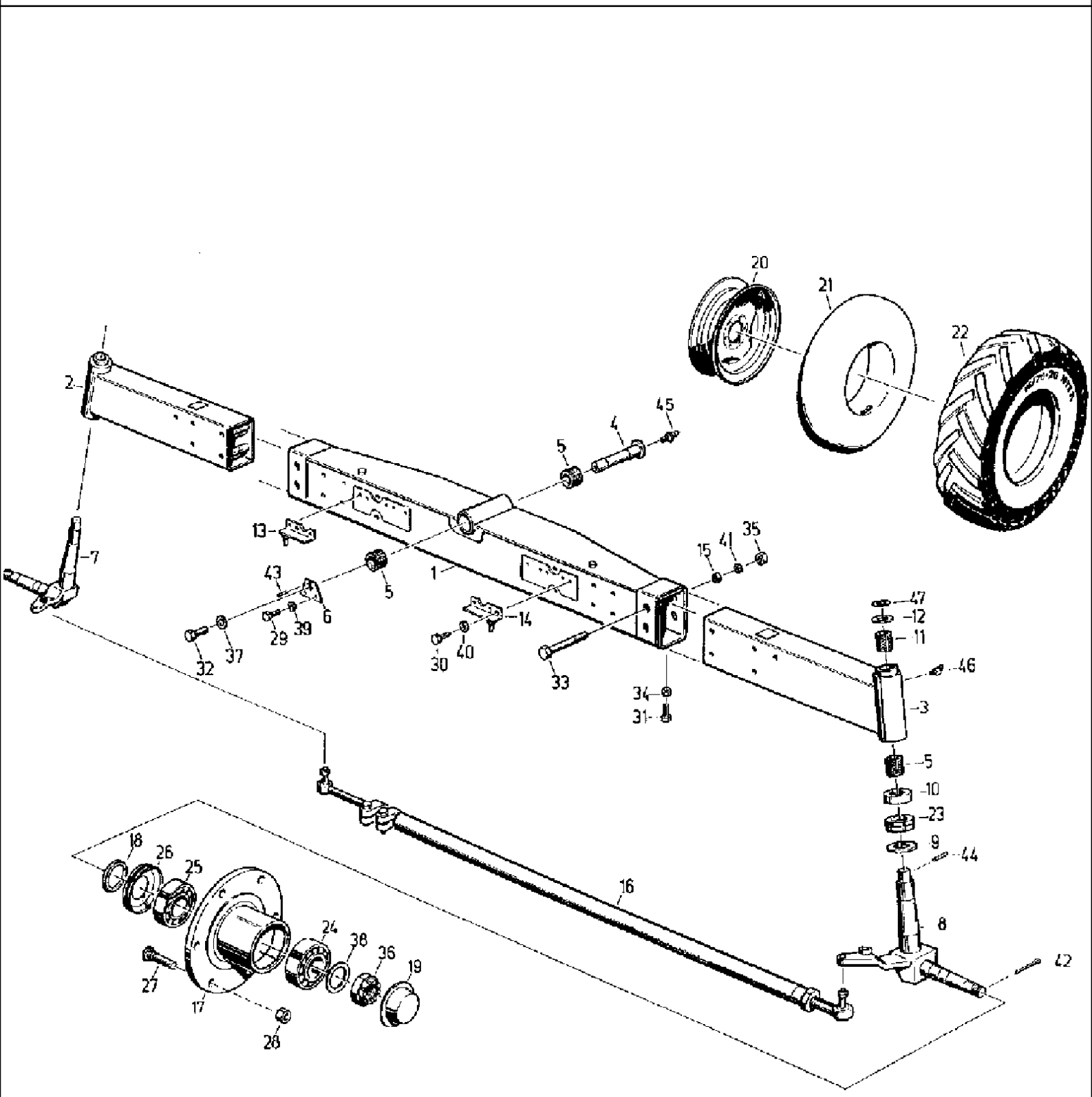

527 CASE IH COMBINE (1/98-12/98)

113 STEERING AXLE

Ref	Part Number	Qty	Description
1	061004430	1	BODY, body
2	061004350	1	CARRIER, AXLE, bracket, g
3	061004391	1	CARRIER, AXLE, bracket, f
4	061031843	1	STUD, BOLT steered axle
5	061024748	4	BUSHING,
6	061031851	1	PLATE, LOCKING,
7	061004238	1	LEVER, ARM steering, g
8	061004334	1	KNUCKLE, STEERING, arm, f
9	061004141	2	WASHER,
10	4221609694	2	COVER,
11	4221609485	2	BUSHING,
12	061004158	2	WASHER,
13	061004488	1	HOLDER, bracket, g
14	061004174	1	HOLDER, bracket, f
15	061004133	8	BUSHING,
16	061011784	1	TIE ROD, track
17	4240046690	2	HUB, wheel
18	060104347	2	RING,
19	001312805	2	CAP, hub
20	061004422	2	RIM, disk wheel, 14 x 20 G -85
21	001401701	2	AIR TUBE, inner, 16 - 20
22	061018967	2	TIRE, RUBBER, 16/70 - 20 10PR
23	9902888133	2	BEARING, BALL, 51112
24	9902888551	2	BEARING, ROLLER, taper, 32208
25	9902888736	2	BEARING, ROLLER, taper, 32212
26	060501422	2	PLASTIC RING, nilos-doublering
27	9929902308	16	RHEOSTAT, wheel bolt, AM 20 x 1.5 x 50
28	060501488	16	NUT, wheel, A 20 -8
29	006344037	2	SCREW, hex, M 10 x 25 -8.8
30	9935960296	6	SCREW, hex, M16 x 1.5 x 35 -10.9
31	9933933174	2	SCREW, hex, M 16 x 50 -8.8
32	9935958180	1	SCREW, hex, M 20 x 1.5 x 45 -10.9
33	060501463	8	SCREW, hex, M 20 x 1.5 x 45 -10.9
34	006201722	2	NUT, hex, M 16 - 05
35	9950896946	8	NUT, hex, M 20 x 1.5 -8
36	060501430	2	NUT, castle, M 30 x 2 - 17H
37	9962923721	1	WASHER, 21
38	060502183	2	WASHER, 31
39	9961920004	2	WASHER, SPRING, plate sparing, B 10
40	9999853133	6	PLATE, LOCKING, washer, VSF M16
41	9961924563	8	DISC, NOTCHED, WASHER toothed lock, J 21
42	9963950651	2	PIN, SPLIT (COTTER), 6.3 x 56
43	9967943833	1	PIN, grooved, 10 x 20
44	9967943794	2	PIN, cylindrical slotted, 10 x 50
45	003617056	1	NIPPLE, LUBE, AM 8 x 1

113 STEERING AXLE

Ref	Part Number	Qty	Description
46	9920925515	4	NIPPLE, LUBE, BM 8 x 1
47	9965920861		SHIM, precision, n.B., 32 x 45 x 1
47	060504216		SHIM, precision, n.B., 32 x 45 x 1.5
47	9965920925		SHIM, precision, n.B., 32 x 45 x 2

115 DRIVING AXLE-S

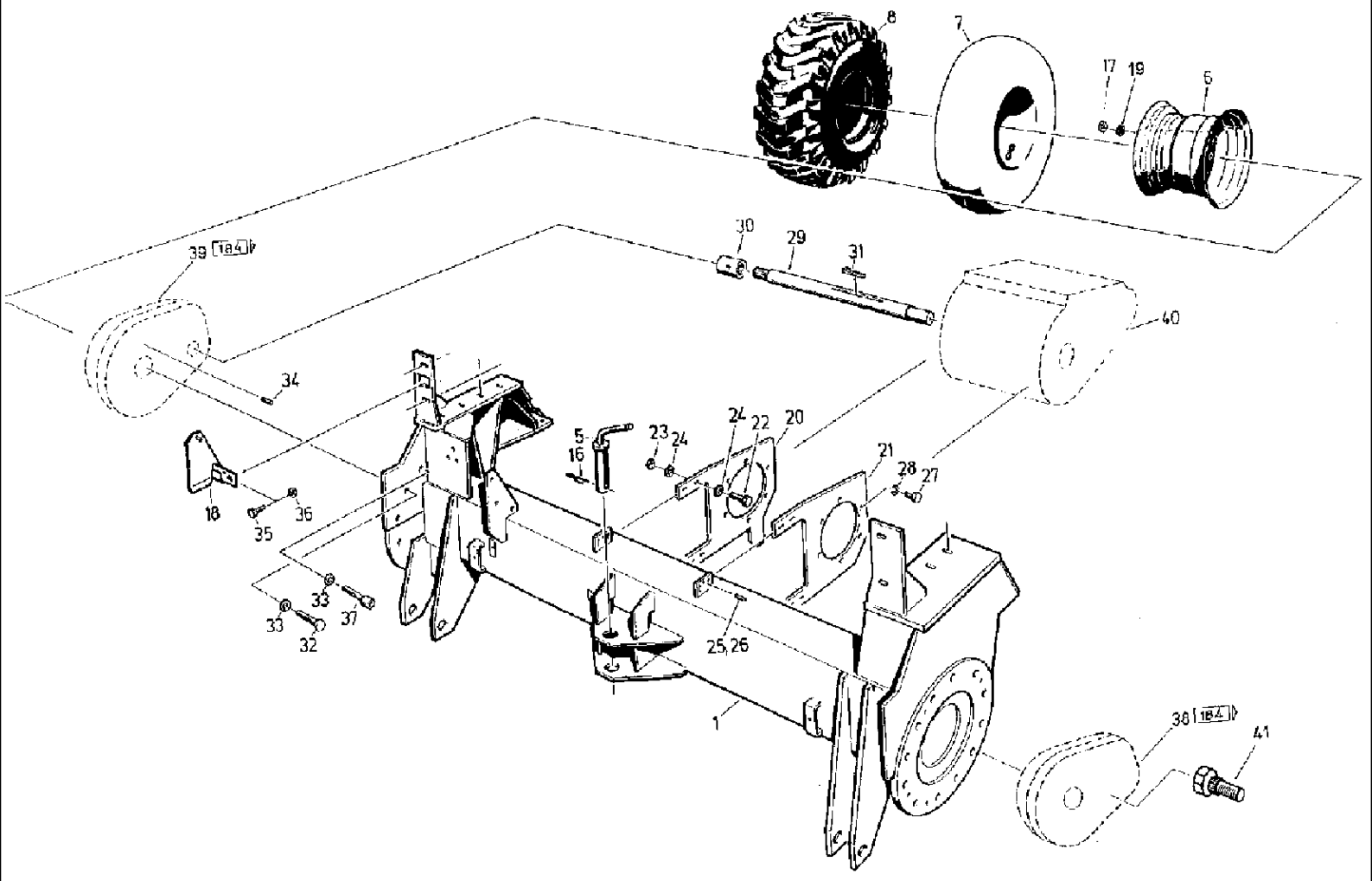

527 CASE IH COMBINE (1/98-12/98)

115 DRIVING AXLE-S

Ref	Part Number	Qty	Description
1	061037785	1	AXLE,
5	9928939642	1	PIN, SPLIT (COTTER), handle bolt, 30 x 125
6	061014102	2	RIM, disk wheel, DW 20 x 26 G 110
7	4240036094	2	AIR TUBE, inner, 18-26 AS
8	060503393	2	TIRE, RUBBER, 23.1-26 AS 14PR
8	060503408	2	TIRE, RUBBER, 28.1-26 AS 12PR
16	060508814	1	SPLIT PIN/SAFETY PIN, hair cotter
17	006111753	16	NUT, wheel, H 22-10
18	061015915	1	SUPPORT,
19	006456567	16	WASHER, LOCK, spring, C 22.5
20	061050042	1	SUPPORT, IRON holding sheet
21	061050050	1	SUPPORT, IRON holding sheet
22	9933932108	8	SCREW, hex, M 12 x 40 -8.8
23	9954897654	8	NUT, hex, VM 12-8
24	9960921988	16	WASHER, 13
25	060513282	4	SPLIT PIN/SAFETY PIN, brace, 7 x 20
26	060513290	4	SPLIT PIN/SAFETY PIN, brace, 12 x 20
27	9933932108	12	SCREW, hex, M 12 x 40 -8.8
28	9961911212	12	WASHER, LOCK, spring, 12
29	060513305	2	SHAFT, counter
30	060513313	2	RING, GUIDE, profile
31	060513321	2	KEY, gib-head, 14 x 9 x 75
32	9933958576	12	SCREW, hex, M20 x 50 -8.8
33	060513338	22	WASHER, LOCK, spring, CN 20
34	060513346	2	STUD, pin, 8.5 H 9 x 32
35	9933930331	1	SCREW, hex, M 8 x 40 -8.8
36	006213830	1	NUT, hex, M 8-8
37	060513354	10	SCREW, cylinder, M 20 x 50
38	060513362	1	TRANSMISSION, straight spur gears f
39	060513370	1	GEARBOX, straight spur, g
40	060513387	1	GEARBOX ASSY, SPUR change speed
41	060520490	16	WHEEL SHAFT, bolt

116 TRAILER COUPLING

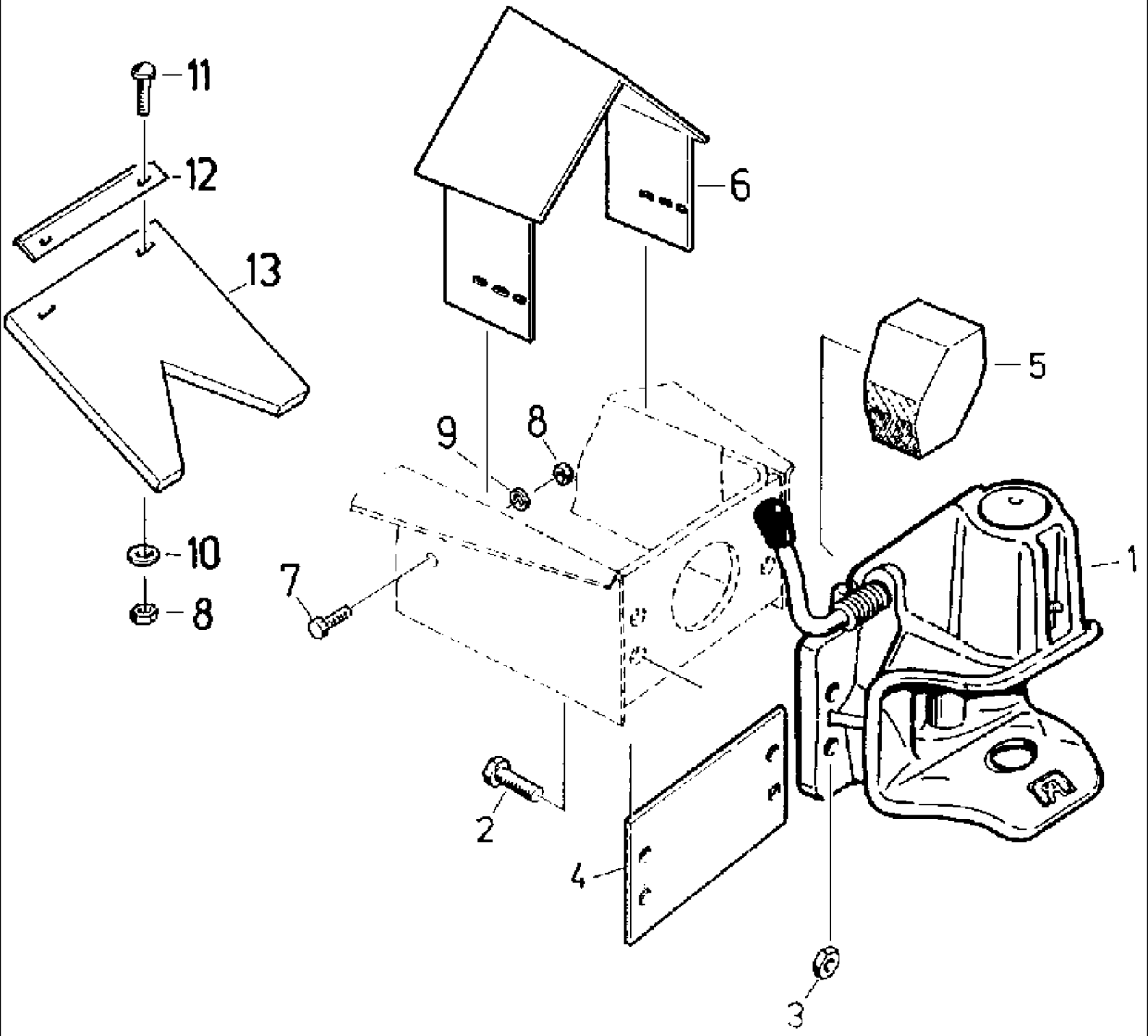

527 CASE IH COMBINE (1/98-12/98)

116 TRAILER COUPLING

Ref	Part Number	Qty	Description
1	060501576	1	DRAW HOOK, coupling
2	9933931308	4	SCREW, hex, M 10 x 45 -8.8
3	9950897818	4	NUT, hex, VM 10 -8
4	061021046	1	SHEET, support
5	061021054	1	RUBBER, mat
6	061038101	1	COVER, PROTECTIVE,
7	9933959415	2	SCREW, hex, M 8 x 22 -8.8
8	006213830	4	NUT, hex, M 8 -8
9	9960921633	2	WASHER, 8.4
10	9999853158	2	PLATE, LOCKING, washer VSF B 8
11	060521032	2	SCREW, flat-round-head, M 8 x 16
12	061065828	1	RAIL,
13	061065836	1	PLATE, covering

117 FUEL TANK

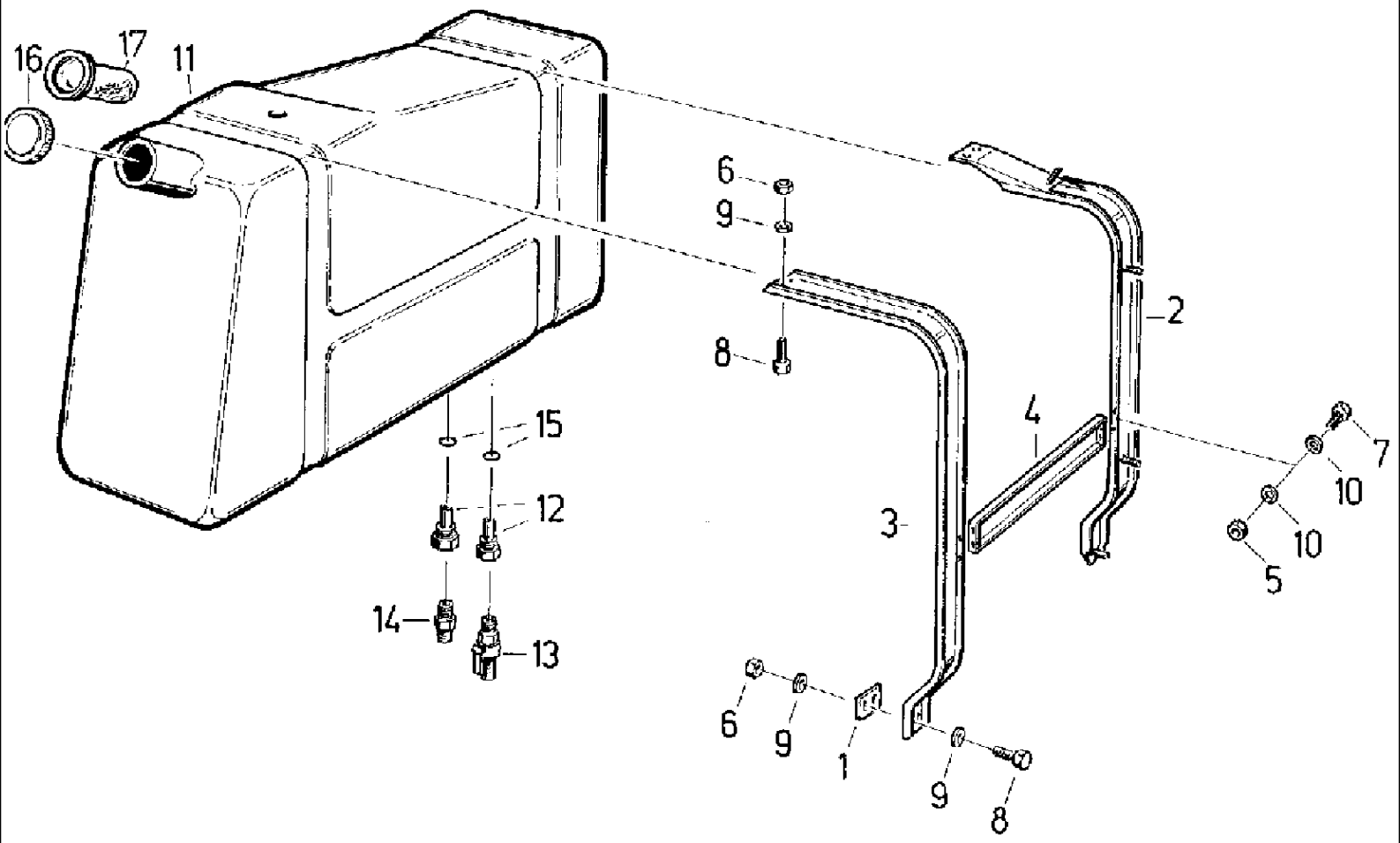

527 CASE IH COMBINE (1/98-12/98)

117 FUEL TANK

Ref	Part Number	Qty	Description
1	061028495	4	BLOCK, shim
2	061028405	1	BOW,
3	061028413	1	BOW,
4	061028421	1	LINK DRAG, connection
5	006213734	4	NUT, hex, M 6-8
6	006213935	8	NUT, hex, M 10-8
7	006338385	4	SCREW, hex, M 6 x 16 -8.8
8	006344037	8	SCREW, hex, M 10 x 25 -8.8
9	9999853094	12	PLATE, LOCKING, washer, VSF-M10
10	9999853100	8	PLATE, LOCKING, washer, VSF-M6
11	060190921	1	RESERVOIR,
12	061028390	2	FITTING, socket
13	061052727	1	VALVE, SHUT-OFF, check
14	060510464	1	ADAPTER, screw connection, XGE 10-L/M16X1,5/A3C
15	9907914993	2	O-RING, round, 22 x 3-NBR90
16	060510407	1	PLUG, cover, DV80
17	060533132	1	SCREEN,

118 DRIVER'S PLATFORM, DRIVER'S SEAT

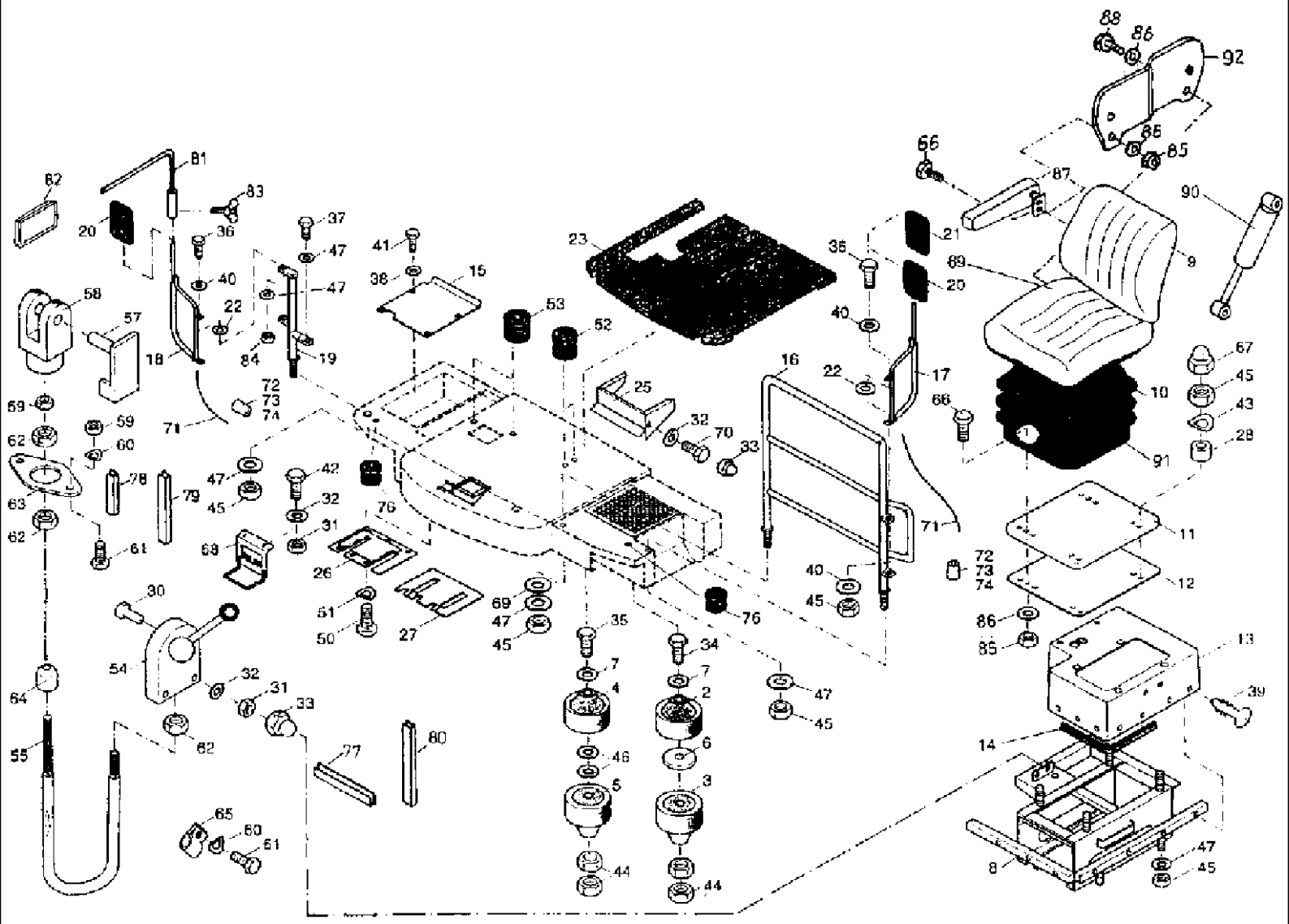

527 CASE IH COMBINE (1/98-12/98)

118 DRIVER'S PLATFORM, DRIVER'S SEAT

Ref	Part Number	Qty	Description
2	4260696804	2	DAMPER, INSULATOR vibrations
3	4140750394	2	DAMPER, INSULATOR vibrations
4	4140750386	4	DAMPER, INSULATOR vibrations
5	4260696812	4	DAMPER, INSULATOR vibrations
6	4260691086	2	PIN, SMALL, PIECE centring
7	4250132814	6	WASHER,
8	061015618	1	SUPPORT, SEAT, bracket
9	060521282	1	CUSHION,
10	060521274	1	BELLOWS,
11	061015642	1	COVER, PROTECTIVE,
12	061015626	1	COVER,
13	061015634	1	COWL, panelling
14	061021544	1	PROFILE,
15	061019984	1	PANEL, cover plate
16	061021368	1	RAMP, handrail
17	060184015	1	BRACKET, f
18	060184056	1	BRACKET, g
19	060212455	1	HOLDER, adapter
20	060508566	2	MIRROR, ATTACHMENT,
21	4260696798	1	MIRROR, head
22	4260701676	4	WASHER,
23	061033564	1	MAT, floor
25	060197077	1	COVER,
26	061065707	1	PLATE, closing
27	061065715	1	GASKET, packing
28	061021560	4	SLEEVE,
30	9933929450	2	SCREW, hex, M 6 x 30-8.8
31	006213734	4	NUT, hex, M 6-8
32	9999853100	4	PLATE, LOCKING, washer, VSF M 6
33	060505442	5	PLUG, vent, SW 10
34	9932959850	2	SCREW, hex, M 12 x 140 -8.8
35	006303375	4	SCREW, hex, M 12 x 120 -8.8
36	9933931123	4	SCREW, hex, M 10 x 30 -8.8
37	9933929065	1	SCREW, hex, M 10 x 20 -8.8
38	9961921673	4	WASHER, R 9
39	060505602	9	RIVET, polyamid
40	9965964438	8	WASHER, 10 x 25 x 3
41	006340781	4	SCREW, hex, M 8 x 16 -8.8
42	006338385	2	SCREW, hex, M 6 x 16 -8.8
42	006338385	2	SCREW, hex, M 6 x 16 -8.8
43	9961920004	4	WASHER, SPRING, lock, B 10
44	006214140	12	NUT, hex, M 12 -8
45	006213935	15	NUT, hex, M 10 -8
46	060501221	8	WASHER, 13
47	9999853094	8	PLATE, LOCKING, washer, VSF M 10

527 CASE IH COMBINE (1/98-12/98)

118 DRIVER'S PLATFORM, DRIVER'S SEAT

Ref	Part Number	Qty	Description
50	9933929200	6	SCREW, hex, M 6 x 12 -8.8
51	9961919927	6	WASHER, SPRING, B 6
52	9972876994	2	GROMMET, NOZZLE cable
53	9972876808	2	GROMMET, NOZZLE cable
54	060506427	1	LEVER, transmitter
55	060506443	1	SLIDE, CONTROL, lever
57	060506484	1	PIN, LARGE, bolt, 6mm
58	060506492	1	HEAD, fork, G 6 x 24
59	006213478	4	NUT, hex, M 5 -8
60	9961919902	2	WASHER, SPRING, B 5
61	9933958471	2	SCREW, hex, M 5 x 14 -8.8
62	060506468	3	NUT, hex, M 10 x 1 -8
63	060506476	1	BALL JOINT, and socket, KG 10
64	060506451	1	GROMMET, nozzle
66	9933929065	6	SCREW, hex, M 8 x 20 -8.8
67	060505596	4	PLUG, vent, SW 16
68	060180495	1	SUPPORT, HOLDER coupling
69	9965921315	1	WASHER, 11 x 36 x 5
70	9933929161	2	SCREW, hex, M 6 x 10 -8.8
71	060508525	2	CABLE, control, 2M
72	060508541	2	CONNECTOR, line
73	060508558	2	EYE, LIFTING, o-hitch
74	060508533	10	CONTACT, pin
76	9972876937	2	GROMMET, BOOT cable, A 10 x 1.5
77	060198535	1	PROFILE,
78	061027420	2	PROFILE,
79	061024282	2	PROFILE,
80	060183600	2	STRIP, PROTECTION, profile
81	061025572	1	BOW,
82	4260696798	1	MIRROR, head
83	9944926806	1	THUMB SCREW, wing, M8 x 20
84	9950897818	4	NUT, hex, VM 10 - 8
85	006213830	6	NUT, hex, M8-8
86	9999853117	8	PLATE, LOCKING, washer VSF M 8
87	060533093	1	ARMREST,
88	9933930331	2	SCREW, hex, M8 x 40 -8.8
89	060521290	1	CUSHION,
90	060521266	2	DAMPER, HITCH, ABSORBER shock
91	060521274	1	BELLOWS,
92	061065957	1	ADAPTER, PIECE intermediate

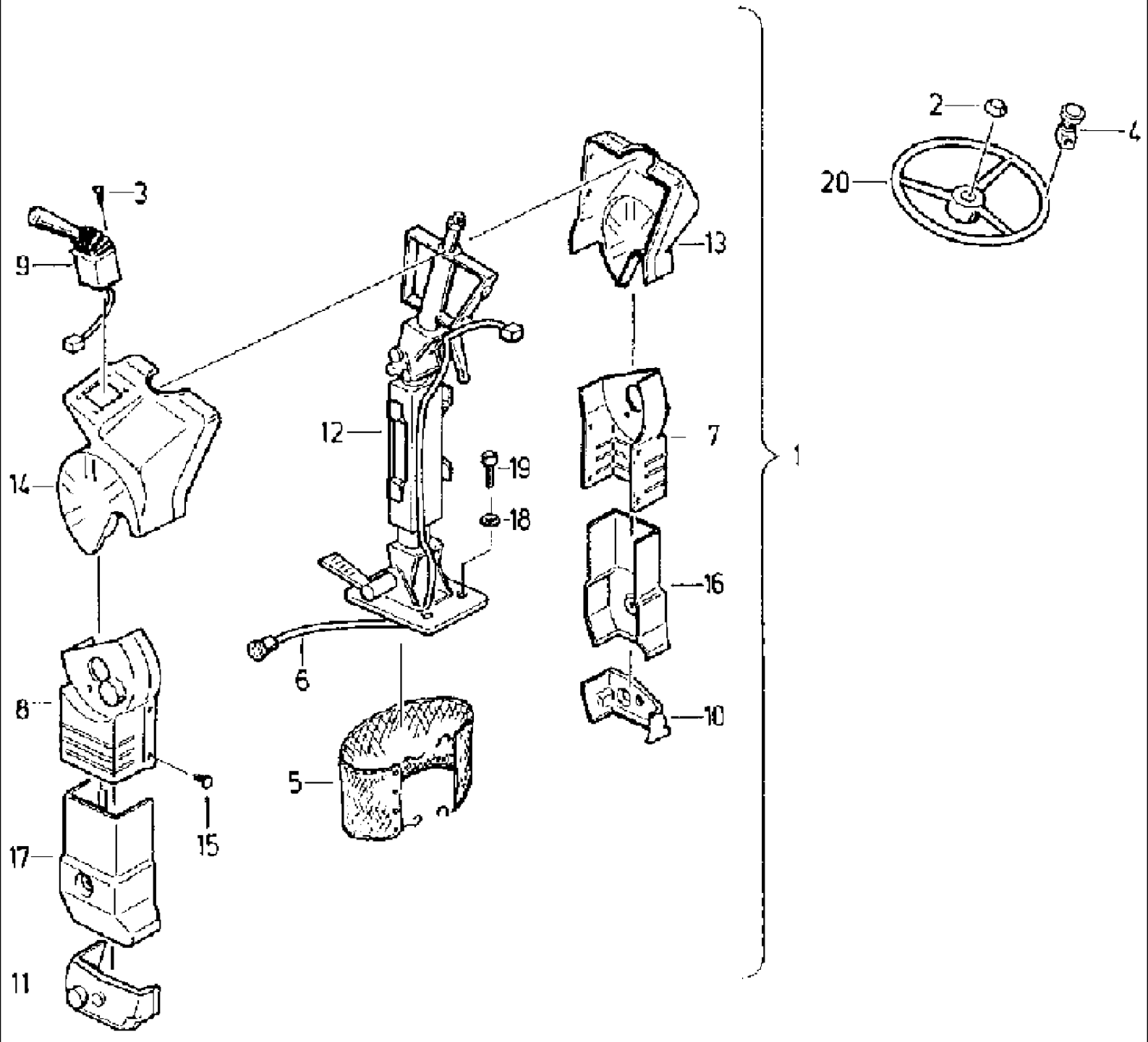
1
2
3
4
5
6
7
8
9
10
11
12
13
14
15
16
17
18
19
20

527 CASE IH COMBINE (1/98-12/98)

121 STEERING COLUMN

Ref	Part Number	Qty	Description
1	060512868	1	STEERING COLUMN,
2	060515042	1	COVER, PROTECTIVE,
3	060517751	8	SCREW, plate
4	060515050	1	KNOB,BALL, twist drip
5	060523926	1	BELLOWS,
6	060517743	1	HARNESS, cable
7	060523887	1	UNIVERSAL JOINT, casing
8	060523895	1	UNIVERSAL JOINT, casing
9	060517735	1	SWITCH,
10	060523901	1	GUARD,
11	060523918	1	GUARD,
12	060524357	1	STEERING COLUMN,
13	060523846	1	SUPPORT, casing
14	060523854	1	SUPPORT, casing
15	060524365	6	RIVET, expansion
16	060523862	1	SUPPORT, casing
17	060523870	1	SUPPORT, casing
18	9961963891	4	DISC, NOTCHED, WASHER toothed, J10.5
19	006279976	4	SCREW, cheese-head, M 10 x 20 -8.8
20	060515034	1	HANDWHEEL,

122 LADDER

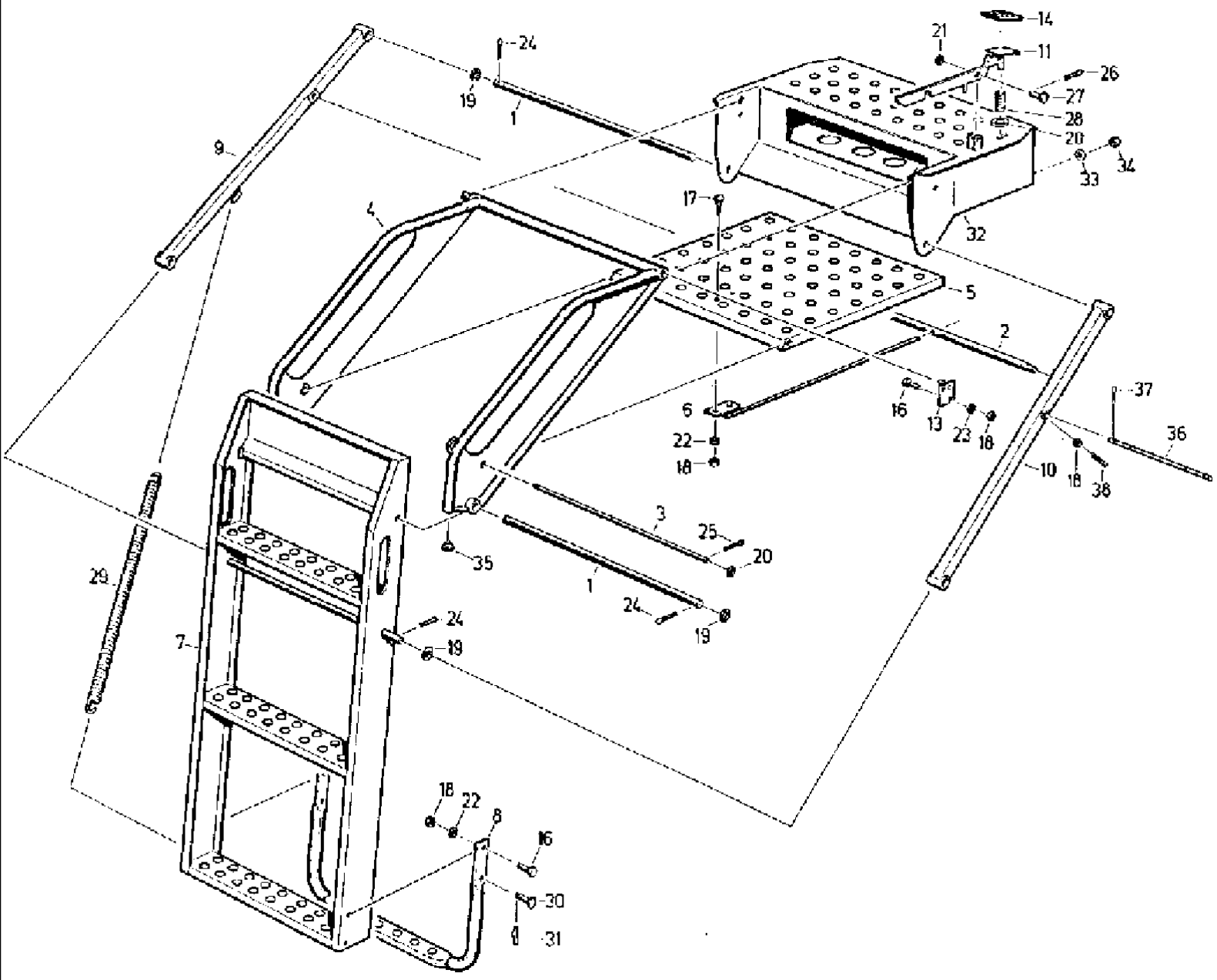
14
21
11
26
27
28
20
34
33
24
19
1
9
17
32
4
5
2
6
22
18
16
13
23
18
37
36
10
18
38
3
25
20
35
1
24
19
29
7
24
19
18
22
8
16
30
31

527 CASE IH COMBINE (1/98-12/98)

122 LADDER

Ref	Part Number	Qty	Description
1	4260700884	2	HOOK, BOLT through
2	4260700868	1	BAR, torsion
3	4260700876	1	STEM, BOLT through
4	4260700788	1	CLAMP, upper part
5	4260700802	1	STEP,
6	4260700810	1	GUIDE,
7	4260700827	1	LADDER, lower part
8	4260700835	1	STEP, section
9	4260700843	1	BRAKE, RODconnecting
10	4260700851	1	BRAKE, ROD connecting
11	061017878	1	LEVER,
13	4240037536	1	PIN, SPLIT (COTTER), BOLT handle
14	4221672514	1	LINING, pedal
16	006340781	3	SCREW, hex, M 8 x 16 -8.8
17	9945926163	2	SCREW, round-head, M 8 x 20 -8.8
18	006213830	10	NUT, hex, M 8 -8
19	9960922353	4	WASHER, A 17
20	9960921988	3	WASHER, A 13
21	9960921787	1	WASHER, A 10.5
22	9999853117	4	PLATE, LOCKING, washer, VSF M 8
23	9961910976	1	SPRING, WASHER lock, B 8
24	006402361	6	PIN, SPLIT (COTTER), 4 x 25
25	9963949947	2	NO DESCRIPTION, split pin, 4 x 20
26	9963950442	1	PIN, SPLIT (COTTER), 3.2 x 18
27	9949863208	1	PIN, LARGE, bolt, B10 h11 x 35 x 26
28	9973883115	1	SPRING, COMPRESSION, A 2 x 22 x 11.5
29	9974882804	1	SPRING, TENSION, C 4 x 36 x 60 Aa -2
30	060155951	2	PIN, LARGE, bolt
31	9928939224	2	SPLIT PIN/SAFETY PIN, hair- cotter
32	060101578	1	STIRRUP, PIECEconnecting
33	9999853125	4	PLATE, LOCKING, washer, VSF M 12
34	006214140	4	NUT, hex, M 12 -8
35	060533003	2	CAP, covering
36	060184505	1	PIN, LARGE, bolt
37	9963949795	2	PIN, SPLIT (COTTER), 3.2 x 20
38	060508984	1	PIN, PLUG thread, M8 x 20

123 HAND BRAKE-S

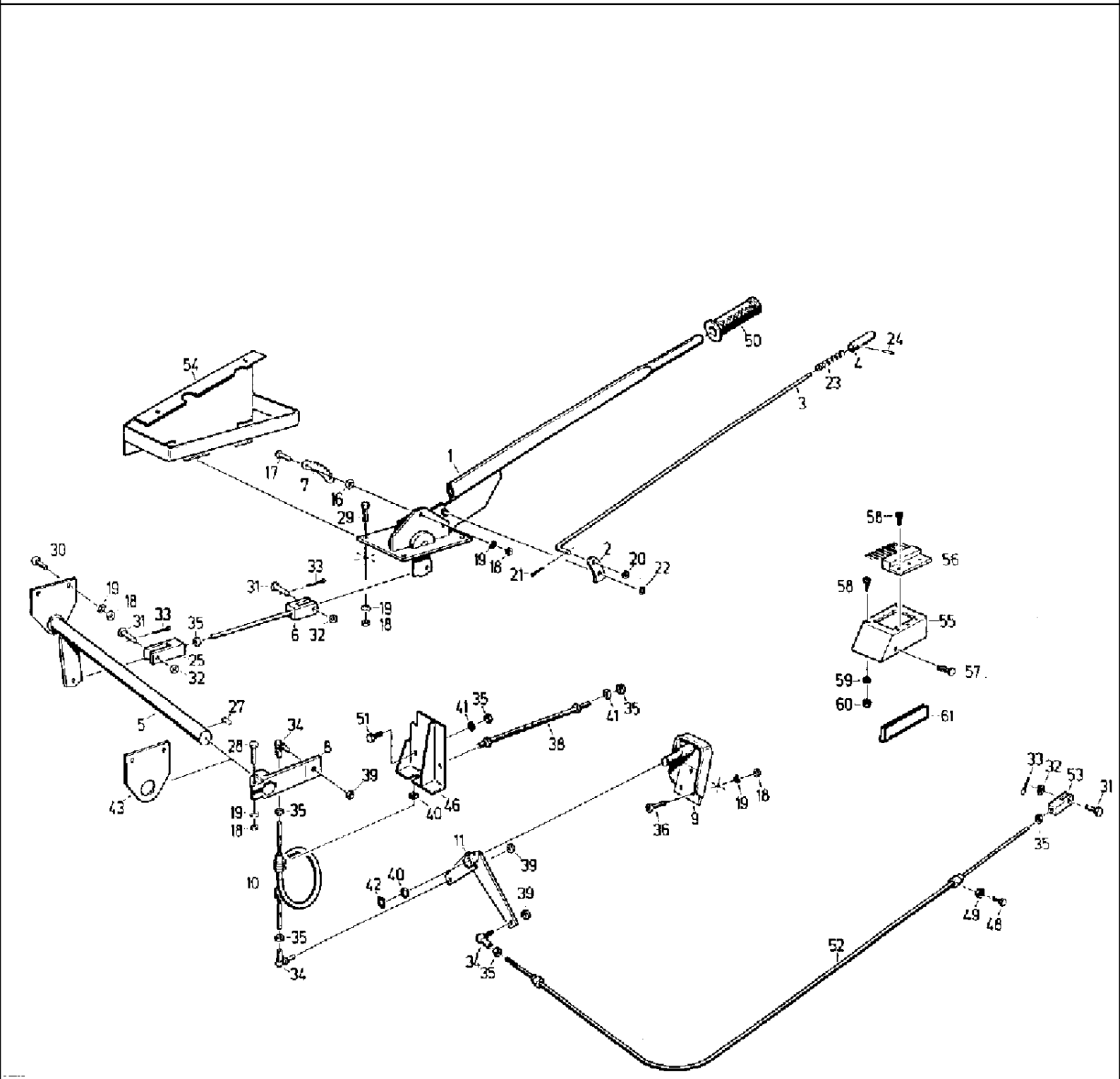

527 CASE IH COMBINE (1/98-12/98)

123 HAND BRAKE-S

Ref	Part Number	Qty	Description
1	4260691213	1	BRAKE LEVER,
2	4260691221	1	PAWL, latch
3	4260691238	1	BAR,
4	4250120691	1	SPRING, BUTTON push
5	060131341	1	SHAFT, hand brake
6	4260691246	1	TIE-ROD,
7	4260708883	1	SEGMENT, toothed
8	061009556	1	CONNECTOR, TERMINAL, PIECE clamping
9	061010461	1	BRACKET,
10	061051486	1	BRAKE, cable
11	061008643	1	LEVER, bent
12	4221605947	1	YOKE, LINKAGE, LEVER brake compensating
16	9964962783		WASHER, n.B., B 8.4
17	9933929173	2	SCREW, hex, M 8 x 25 -8.8
18	006213830	14	NUT, hex, M 8 -8
19	9999853158	17	PLATE, LOCKING, washer, VSF-B 8
20	006510927	1	WASHER, A 6.4
21	9963949297	1	PIN, SPLIT (COTTER), 1.6 x 12
22	9964917457	1	CIRCLIP, 12 x 1
23	9973879514	1	SPRING, COMPRESSION, C 1.4 x 15 x 17.5
24	9967942873	1	PIN, PLAIN grooved, 3 x 12
25	9969883232	2	CRADLE, fork head, G 10 x 40
26	9999853158	3	PLATE, LOCKING, washer, VSF B8
27	9965956093	1	KEY, BUCKET TOOTHRT, fitting, A 8 x 7 x 28
28	9932930373	1	SCREW, hex, M 8 x 45 -8.8
29	9933930026	4	SCREW, hex, M 8 x 25 -8.8
30	9933929715	4	SCREW, hex, M 8 x 18 -8.8
31	9949863072	3	PIN, LARGE, bolt, B10 h11 x 30 x 24
32	9960921787	3	WASHER, A 10.5
33	9963949762	3	PIN, SPLIT (COTTER), 3.2 x 16
34	9910957364	3	JOINT, angle
35	006213935	9	NUT, hex, M 10 -8
36	006281191	3	SCREW, cheese-head, M 8 x 30 -8.8
38	061015876	1	HOOK, capstan
39	9950897818	3	NUT, hex, VM 10 -SW 16-8
40	9960922353	5	WASHER, A 17
41	9999853166	1	PLATE, LOCKING, washer, VSF B10
42	9964917143	1	CIRCLIP, 16 x 1
43	4221605504	1	BEARING, SHIELD end
46	061010412	1	HOLDER, intake
48	9933928980	2	SCREW, hex, M 5 x 12 -8.8
49	006213478	2	NUT, hex, M 5 -8
50	061022336	1	GRIP,
51	9933929065	1	SCREW, hex, M 10 x 20 -8.8
52	061028696	1	BRAKE, cable

123 HAND BRAKE-S

Ref	Part Number	Qty	Description
53	9969883232	1	CRADLE, fork head, G 10 x 40
54	061050805	1	RETAINER, bracket
55	061015312	1	COWL, hood
56	061015320	2	BRUSH,
57	060505602	1	RIVET, polyamid-pin
58	006088648	6	SCREW, fillister-head, M 5 x 12 -5.8
59	9961919902	9	WASHER, SPRING, B 5
60	006213478	9	NUT, hex, M 5 -8
61	061021552	1	PROFILE,
62	060522572	4	NUT, hex, M 16 x 1.5

125 PEDAL BRAKE, SINGLE-WHEEL BRAKE-S

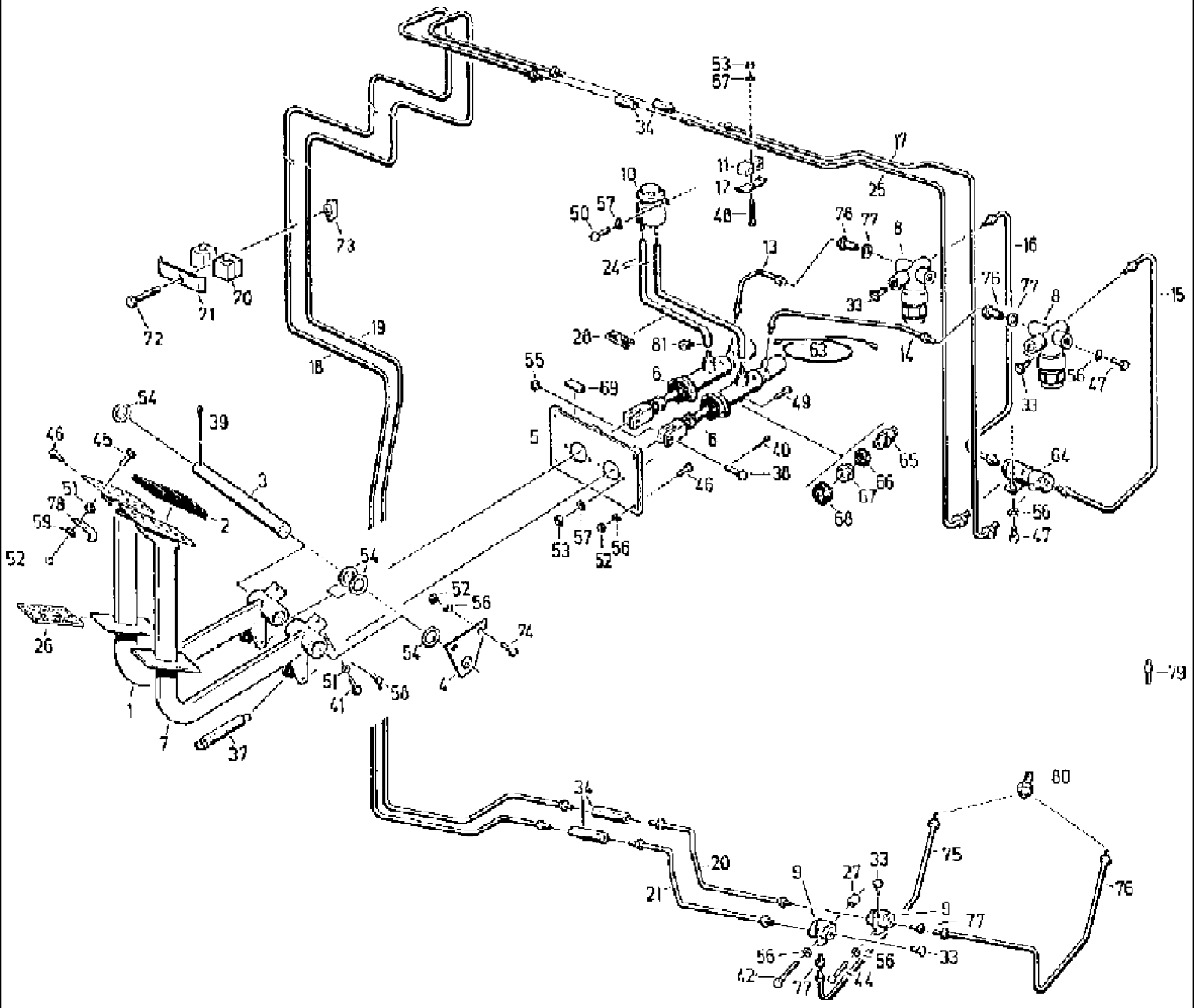

527 CASE IH COMBINE (1/98-12/98)

125 PEDAL BRAKE, SINGLE-WHEEL BRAKE-S

Ref	Part Number	Qty	Description
1	061017435	1	PEDAL,
2	060504570	2	LINING, pedal
3	4260691326	1	PIN, LARGE, SHAFT pedal
4	4260691342	1	BEARING, SHIELD end
5	4260709513	1	SUPPORT, PLATE retaining
6	4260704002	2	CYLINDER, MASTER, cylinder, BH 183
7	061017443	1	PEDAL,
8	060513467	2	PRESSURE LIMITER,
9	9914954856	2	DISTRIBUTOR, 7 M 10 x 1
10	4254130448	1	CONTAINER,
11	4260696724	6	PROFILE, FITTING pipe, A 4
12	4250132445	3	SHEET, PLATE clamping
13	061033556	1	BRAKE, pipe
14	061033523	1	BRAKE, pipe
15	061033548	1	BRAKE, pipe
16	061033531	1	BRAKE, pipe
17	060084077	1	BRAKE LINE, pipe 4
18	061026733	1	BRAKE, pipe
19	061026741	1	BRAKE, pipe
20	061026790	1	BRAKE, pipe
21	061026774	1	BRAKE, pipe
22	061028710	1	BRAKE, pipe
23	061028702	1	TUBE, HYD, PIPE brake
24	061015337	2	HOSE,
25	060084052	1	BRAKE LINE, pipe 3
26	061017507	2	JOINT, RUBBER, packing
27	4240026316	1	BUSHING, sleeve
28	060167988	2	PAD, RUBBER, plate
33	4260696757	4	SCREW, plug, A 98
34	004004631	4	PIPE, fitting
37	9974882652	2	SPRING, TENSION, A 2.8 x 30 x 16 Aa2
38	9949863072	2	PIN, LARGE, bolt, 10 h11 x 30 x 24
39	9963950627	4	PIN, SPLIT (COTTER), 6.3 x 40
40	9963949762	2	PIN, SPLIT (COTTER), 3.2 x 16
41	006334131	2	SCREW, hex, M 8 x 45 -8.8
42	9933930331	1	SCREW, hex, M 8 x 40 -8.8
44	9933929173	1	SCREW, hex, M 8 x 25 -8.8
45	9941934681	1	SCREW, countersunk, M 8 x 25 -5.8
46	9933959415	8	SCREW, hex, M 8 x 22 -8.8
47	9933929797	3	SCREW, hex, M 8 x 12 -8.8
48	9933929450	3	SCREW, hex, M 6 x 30 -8.8
49	9930977163	4	SCREW, hex, M 6 x 20 -8.8
50	9933929161	2	SCREW, hex, M 6 x 10 -8.8
51	9950896038	3	NUT, hex, M 8 -05
52	006213830	10	NUT, hex, M 8 -8

125 PEDAL BRAKE, SINGLE-WHEEL BRAKE-S

Ref	Part Number	Qty	Description
53	006213734	5	NUT, hex, M 6 -8
54	9960922876	4	WASHER, 26
55	9960923153	2	WASHER, 11
56	9961920061	13	WASHER, SPRING, B 8
57	9961919927	7	WASHER, SPRING, B 6
58	9920925515	2	NIPPLE, LUBE, BM 8 x 1
59	9960921633	1	WASHER, A 8.4
63	021365130	1	CABLE,
64	060153322	1	VALVE, compensating
65	9914059651	2	SWITCH, push-button, B
66	003781774	2	BOOT, seal, BH 16
67	003781782	2	BODY, VALVE, TZ 36
68	003781790	2	FAIRING, LIGHT, dust cap, DZ 8
69	060166126	4	GASKET,
70	003799863	1	CIRCLIP, 06/06 PP
71	060504160	1	PLATE, LOCKING, safety, S/1
72	006646146	1	SCREW,
73	006646138	1	NUT, for T-slots SM
74	006340781	2	SCREW, hex, M 8 x 16 -8.8
76	060165736	2	ADAPTER, NECK screw
77	004101263	2	GASKET,
78	061023080	1	LEVER,
79	060510882	2	BREATHER, valve
80	060512386	2	ADAPTER, PIECE intermediate
81	060505563	2	CLAMP, hose

127 CONTROL PANEL

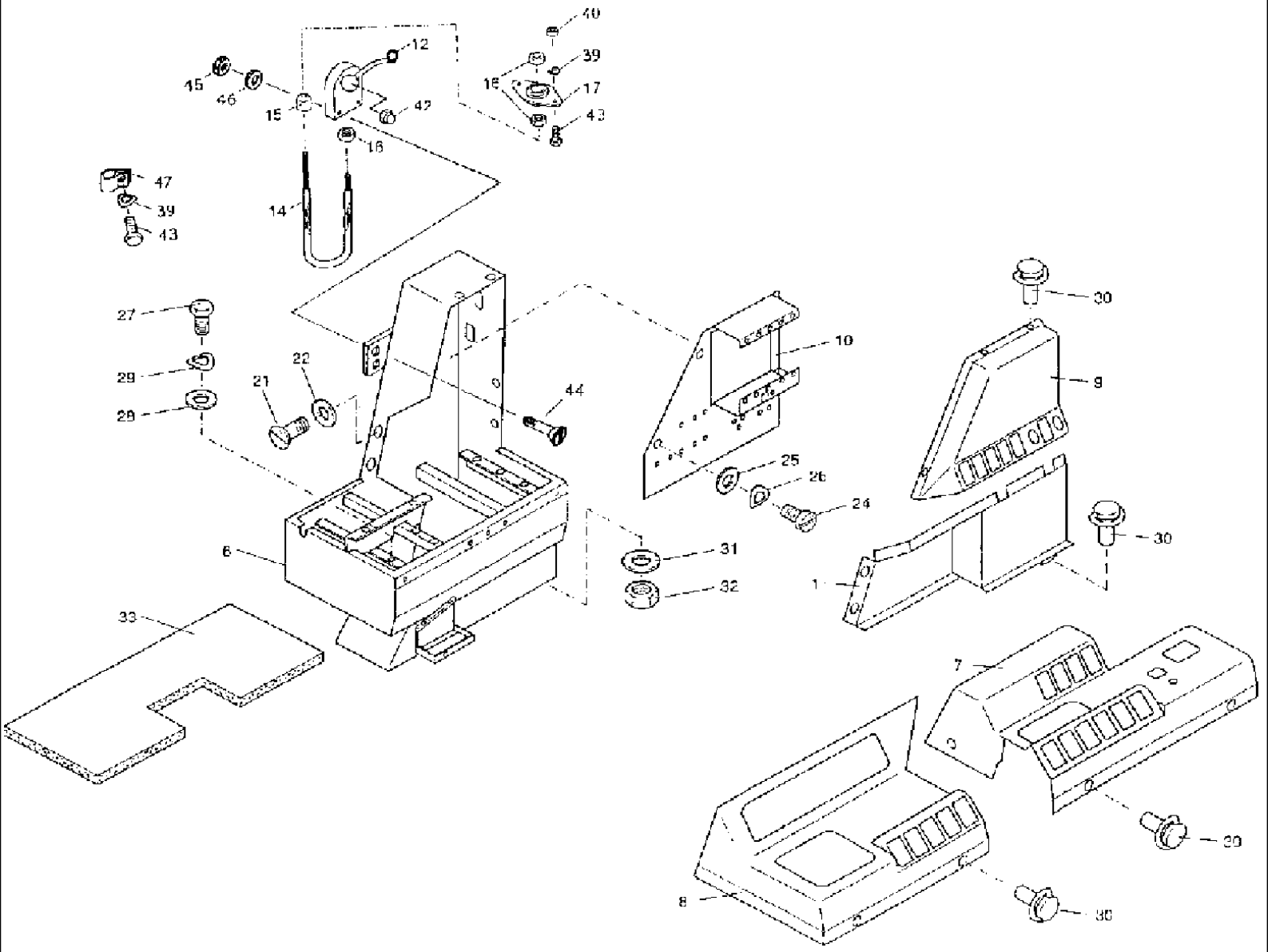

527 CASE IH COMBINE (1/98-12/98)

127 CONTROL PANEL

Ref	Part Number	Qty	Description
1	4260701200	1	COWL, covering
6	061008723	1	BRACKET, frame
7	061026838	1	PANEL, INSTRUMENTS,
8	061011052	1	PANEL, INSTRUMENTS,
9	4260714914	1	FLAP,
10	061021206	1	CARRIER, tool
12	060506507	1	CONTROL, transmitter
14	060506523	1	SLIDE, CONTROL, lever
15	060506451	1	GROMMET, hose
16	060506468	3	NUT, hex, M 10 x 1-8
17	060506476	1	BALL JOINT, and socket, KG 10
21	9940927273	6	SCREW, fillister-head, M 5 x 10 -5.8
22	9960924058	8	DISC, washer, A 5
24	9933929200	3	SCREW, hex, M 6 x 12 -8.8
25	006510228	3	WASHER, B 6.4
26	9961919927	3	WASHER, SPRING, B 6
27	006335606	4	SCREW, hex, M 5 x 10 -8.8
28	9965962315	5	WASHER, B 5.3
29	9961919902	4	WASHER, SPRING, B 5
30	003790478	13	BOLT, panex
31	9961921673	4	WASHER, R 9
32	006213830	4	NUT, hex, M 8 -8
33	061005376	1	MAT,
42	060505442	3	PLUG, hex
43	9933958471	6	SCREW, hex, M5 x 14 -8.8
44	060512425	2	SCREW, fillister-head, M6 x 35 -5.8
45	006213734	2	NUT, hex, M6 -8
46	006576010	2	WASHER, locking, VSF M 6
47	060503955	1	CLAMP,

128 CAB, AIR CONDITION

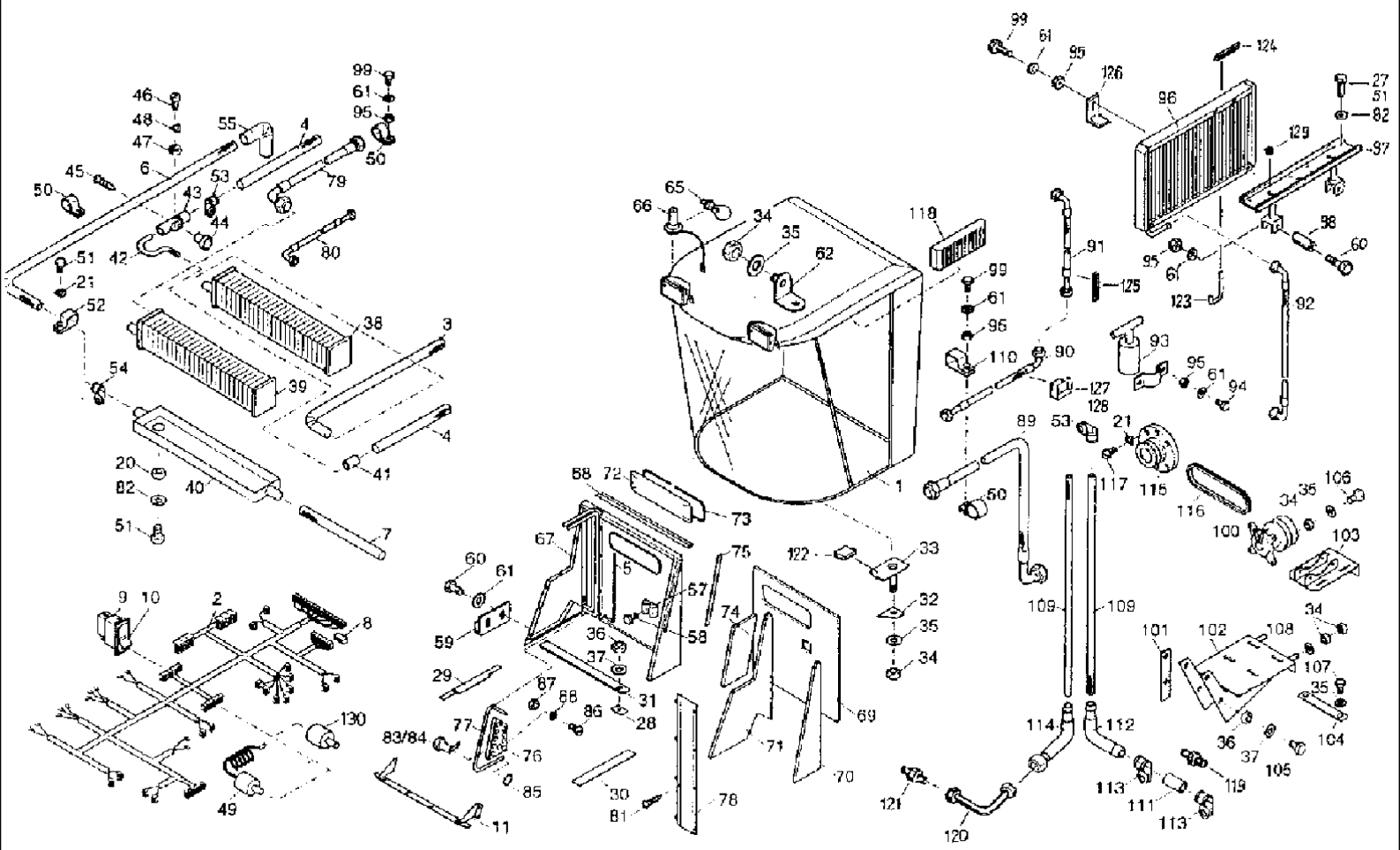

527 CASE IH COMBINE (1/98-12/98)

128 CAB, AIR CONDITION

Ref	Part Number	Qty	Description
1	061020463	1	FRAME, CAB,
2	061022151	1	HARNESS, TREE cable
3	061021995	1	HOSE, LARGE, H2
4	061022006	2	HOSE, LARGE, H1
5	061022014	2	HOSE, WATER condensed 1
6	061022022	1	HOSE, WATER condensed 2
7	061022030	1	HOSE, WATER condensed 3
8	060505434	1	RELAY, switch
9	060157793	1	SWITCH, toggle
10	060506347	1	INSERT, switch
11	061022168	1	SUPPORT, back rest
20	006213734	2	NUT, hex, M 6 -8
21	9961919927	9	WASHER, SPRING, plate sparing, B 6
22	060505442	1	PLUG, hex cap
27	006338713	2	SCREW, hex, M 6 x 25 -8.8
28	061022850	1	REINFORCEMENT,
29	061022867	1	STRIP, SEALING, packing, g
30	061022176	1	STRIP, SEALING, packing, f
31	061022184	1	SECURING BAND, packing strip
32	061018686	2	SHEET, IRON spacer
33	061020318	2	CLASP,
34	006213935	11	NUT, hex, M 10 -8
35	9999853094	11	PLATE, LOCKING, washer, VSF M 10
36	006214140	4	NUT, hex, M 12 -8
37	9999853125	4	PLATE, LOCKING, washer, VSF M 12
38	060505450	1	HEAT-EXCHANGER,
39	060505467	1	EVAPORATOR,
40	060505475	1	PAN, water
41	060505483	1	ADAPTER, PIECE connecting
42	060505491	1	RUBBER SLEEVE, PIECE form
43	060505506	1	COCK, regulating
44	060505514	2	BUTTON,
45	060500003	1	SCREW, metal, 4.8 x 38
46	9936984727	1	SCREW, cylinder, M 4 x 20 -5.8
47	9950895496	1	NUT, hex, M 4 -8
48	9961919896	1	WASHER, SPRING, SPARING Plate, B 4
49	060505522	1	THERMOSTAT,
50	060505395	7	CLAMP, pipe, 19-32
51	9930977163	11	SCREW, hex, M 6 x 20 -8.8
52	060505547	1	CLAMP,
53	9908952610	10	CLAMP, BINDER hose, AL 16-27
54	060505563	2	CLAMP, BINDER hose, AL 12-22
55	060505571	2	HOSE, LARGE, PIECE connecting, WS 14
57	060505998	1	CONTAINER,
58	9933929450	3	SCREW, Hex, M 6 x 30 -8.8

527 CASE IH COMBINE (1/98-12/98)

128 CAB, AIR CONDITION

Ref	Part Number	Qty	Description
59	061023152	1	LANDSIDE, ANGLE attachement
60	006303592	2	SCREW, hex, M 8 x 65 -8.8
61	9999853117	45	PLATE, LOCKING, washer, VSF M 8
62	061024354	1	ANGLE, holding
65	060506330	1	BULB, incandescent, K-24V/10W
66	9019876492	2	LIGHT, halogen
67	061019373	1	COVER, REAR, wall
68	061019558	1	SEAL, packing
69	061019566	1	PARTITION, element
70	061019574	1	PARTITION, element, f
71	061019582	1	PARTITION, element, g
72	4240044350	1	GLASS, CAB, rear window
73	4254135557	1	BUFFER, RUBBER, support
74	061022842	1	PLATE, STEEL, ELEMENT wall, g
75	061019590	2	SEAL, SHAFT, lip
76	061019638	1	PIN, ELECT TERMINAL, connector
77	061019646	1	SEAL, packing
78	061021817	1	COVER, PROTECTIVE, plate
79	061021841	1	HOSE ASSY., AGENT cooling NDG
80	061021858	1	HOSE, FLEXIBLE, AGENT cooling HDF
81	9944989555	4	SCREW, metal, 4.2x13
82	9999853100	12	PLATE, LOCKING, washer, VSF M 6
83	060503135	1	HOUSING,
84	060505401	1	LATCH, interlock
85	4240025790	2	COVER,
86	060520827	32	SCREW, hex, M 3 x 12 -5.8
87	9950894093	32	NUT, hex, M 3 -8
88	9961966966	32	WASHER, SPRING, SPARING plate, B 3
89	061023257	1	HOSE, AGENT cooling NDG
90	061023265	1	HOSE, AGENTcooling HDF
91	061023273	1	HOSE, cooling HDF
92	061023281	1	HOSE, AGENT cooling HDG
93	060506138	1	FILTER, dryer
94	006340781	2	SCREW, hex, M 8 x 16 -8.8
95	006213830	28	NUT, hex, M 8 -8
96	060508357	1	CONDENSER,
97	061026694	1	SUPPORT, COMPONENT holding
98	061026678	2	SLEEVE,
99	9933930001	16	SCREW, hex, M 8 x 20 -8.8
100	060506146	1	COMPRESSOR,
101	061023128	2	BLOCK, shim
102	060094062	1	BRACKET, console
103	060094101	1	SUPPORT, poppet
104	060094142	2	SHAFT, SHORT, PLATE thread
105	9933932245	4	SCREW, hex, M 12 x 50 -8.8

128 CAB, AIR CONDITION

Ref	Part Number	Qty	Description
106	9933931123	4	SCREW, hex, M 10 x 30 -8.8
107	006344037	4	SCREW, hex, M 10 x 25 -8.8
108	9960921787	2	WASHER, A 10.5
109	061023618	2	HOSE, LARGE, HKM
110	060506154	4	CLAMP, pipe, 25-25
111	061023626	1	ADAPTER, PIECE connecting
112	061023634	1	RESTRICTOR, reducer
113	003785118	2	CLAMP, BINDER hose, A 23-35
114	061023642	1	CONNECTOR, HYD.,
115	060167625	1	GROOVED PULLEY, v-belt
116	060500044	1	BELTS, SET OF 2, 1 set V, 2A x 1000
117	006278942	6	SCREW, cylinder, M 6 x 16 -10.9
118	060152321	2	FILTER, cartridge
119	060502407	1	SUPPORT, nipple
120	061023642	1	CONNECTOR, HYD., FITTING w-type
121	003784953	1	ADAPTER, CONNECTION screwing
122	061029190	1	BLOCK, shim
123	061031907	1	ARM, suspension
124	061027445	1	STRIP, PROTECTION, edge
125	061027453	2	STRIP, PROTECTION, edge
126	061026686	1	LANDSIDE, ANGEL bearing
127	061027437	3	CLAMP,
128	061027461	3	LOOM, HOSE protection
129	060505354	2	GROMMET, PASSAGE rubber
130	060511280	1	SWITCH, 3-Stufen

527 CASE IH COMBINE (1/98-12/98)

131 GEAR BOX-S

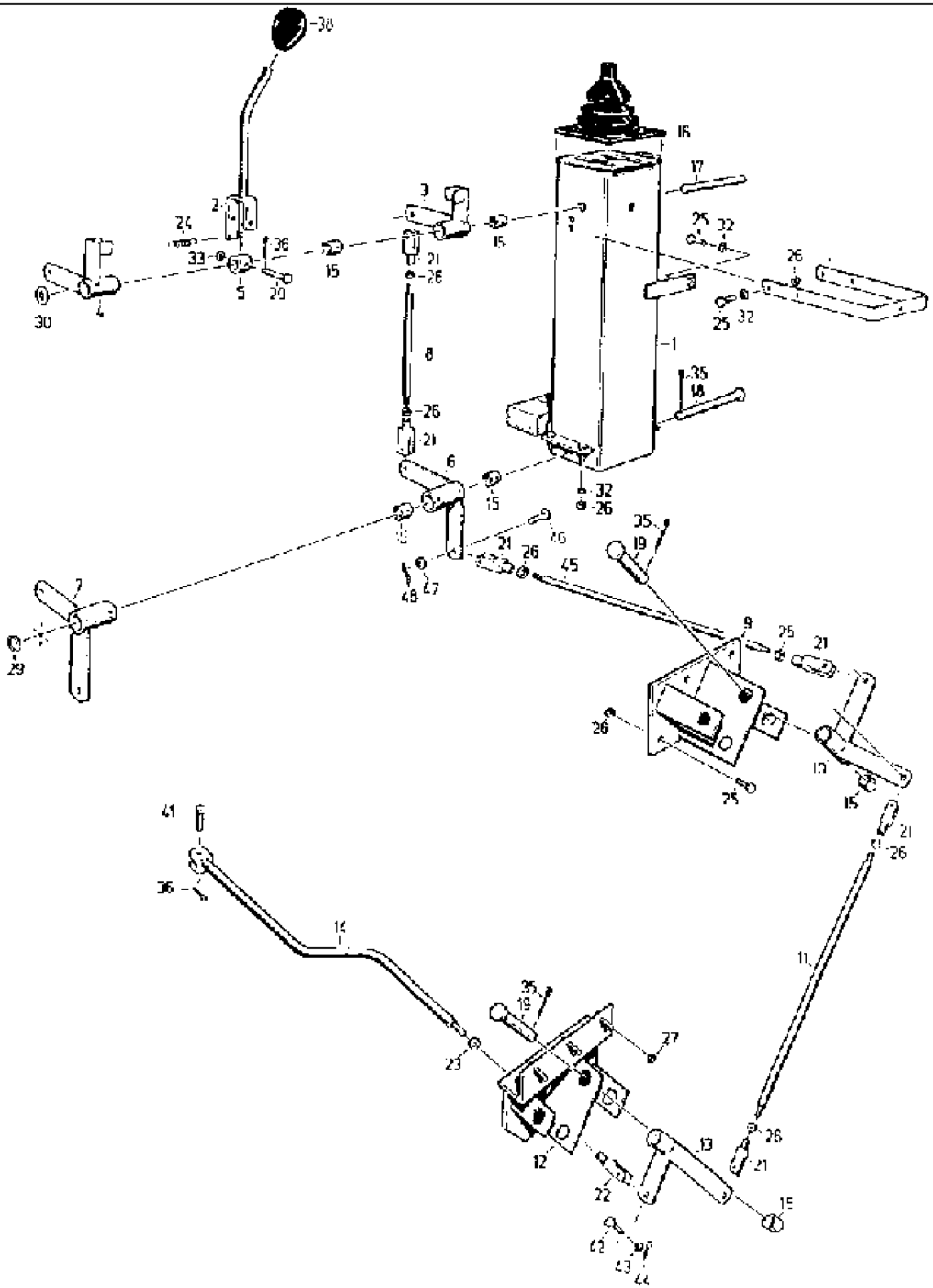

527 CASE IH COMBINE (1/98-12/98)

131 GEAR BOX-S

Ref	Part Number	Qty	Description
1	061028856	1	STANCHION, pillar
2	061028993	1	SPEED CHANGE LEVER,
3	061028768	1	LEVER,
4	061028792	1	LEVER,
5	4260696146	1	RING,
6	061028807	1	LEVER,
7	061028823	2	LEVER,
8	061029045	4	ROD,
9	061028897	1	RETAINER,
10	061028880	2	LEVER,
11	061028977	2	ROD,
12	061028952	1	RETAINER,
13	061028936	2	LEVER,
14	061029100	2	ROD,
15	4240030193	16	BUSHING,
16	061037664	1	BELLOWS,
17	060069631	1	PIN, LARGE, bolt
18	9949864957	1	PIN, LARGE, bolt, B16 h11 x 110 x 104
19	9949864965	4	PIN, LARGE, bolt, B16 h11 x 65 x 59
20	9949862971	1	PIN, LARGE, bolt, B6 h11 x 45 x 40
21	9969883265	12	CRADLE, fork head, G 8 x 32
22	9969883232	2	CRADLE, fork head, G10 x 40
23	006213935	2	NUT, hex, M 10 -8
24	006735493	1	SPRING, TENSION, B1, 22 x 13 x 10 Aa 2
25	9933930001	8	SCREW, hex, M 8 x 20 -8.8
26	006213830	23	NUT, hex, M 8 -8
27	003792053	3	NUT, hex, VM 8 -8
29	9960922353	1	WASHER, A 17
30	006625703		WASHER, precision, n.B., 16 x 22 x 0.5
32	9999853158	8	PLATE, LOCKING, washer, VSF B8
33	9960919856	1	WASHER, 6.6
35	006402361	5	PIN, SPLIT (COTTER), 4 x 25
36	9963949297	3	PIN, SPLIT (COTTER), 1.6 x 12
38	001320315	1	KNOB,BALL, handle, C 50 FS
41	060150256	2	PIN, LARGE, bolt, B6 h11 x 35 x 31
42	9949863072	2	PIN, LARGE, bolt, B10 h11 x 30 x 24
43	9960921787	2	WASHER, A 10.5
44	003780113	2	PIN, SPLIT (COTTER), 3.2 x 22
45	061029510	2	ROD,
46	9949864973	8	PIN, LARGE, bolt, B8 h11 x 25 x 20
47	9960921633	8	WASHER, A 8.4
48	9963949336	8	PIN, SPLIT (COTTER), 2 x 12

133 RADIO - RADIOTELEPHONY

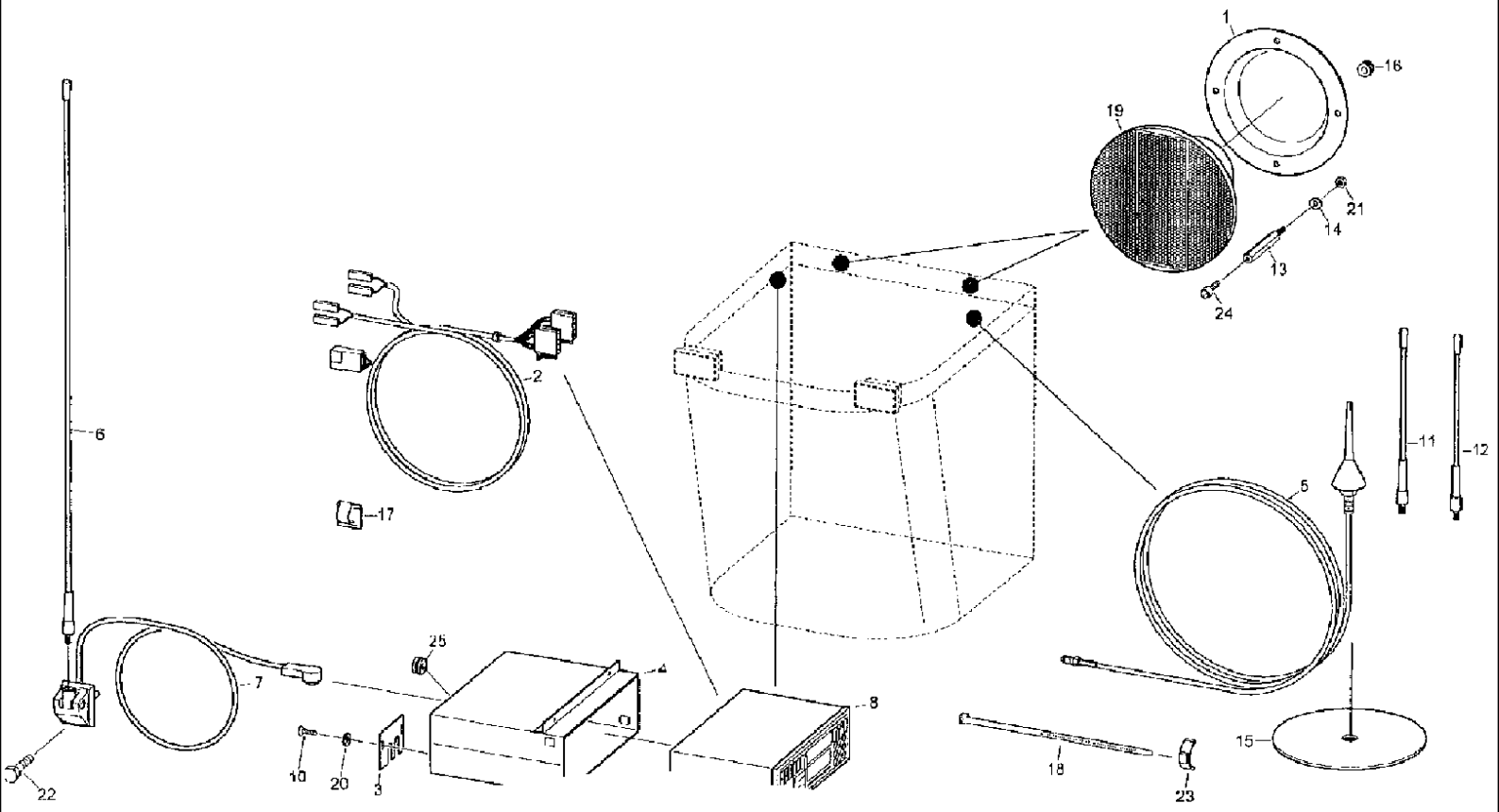

527 CASE IH COMBINE (1/98-12/98)

133 RADIO - RADIOTELEPHONY

Ref	Part Number	Qty	Description
1	061033603	2	COVER, PROTECTIVE, covering
2	061051373	1	CONNECTOR, TERMINAL, line
3	061051365	1	COVER,
4	061037158	1	CASE,
5	060513475	1	ANTENNA,
6	060527456	1	ANTENNA,
7	060513803	1	HOLDER, antenna
8	060513844	1	RADIO,
9	9937939272	4	SCREW, plate, ST 4.2 x 9.5
10	060503311	2	SCREW, plate, ST 2.9 x 6.5
11	060513828	1	ANTENNA, rod
12	060513811	1	ANTENNA,
13	060514187	8	PIN, LARGE, BOLT spacer, DA7 - M 4 x 25
14	9961919896	8	WASHER, SPRING, B 4
15	060513483	1	WEIGHT, counter
16	9972876920	2	GROMMET, cable, A 8 x 2.5
17	9019059944	6	CLIP, CABLE, ACC38-A-20
18	060152467	3	CABLE, tie
19	060513852	1	SPEAKER, loud
20	9960919823	2	WASHER, A 3.2
21	9950895496	8	NUT, hex, M 4 -8
22	9933929161	1	SCREW, hex, M 6 x 10 -8.8
23	060172093	3	CLAMP, ARMATURE expansion
24	006001885	8	SCREW, cheese-head, M 4 x 12 -4.8
25	060514154	1	CABLE ASSY., grommet

134 CAB WINDOW PANES

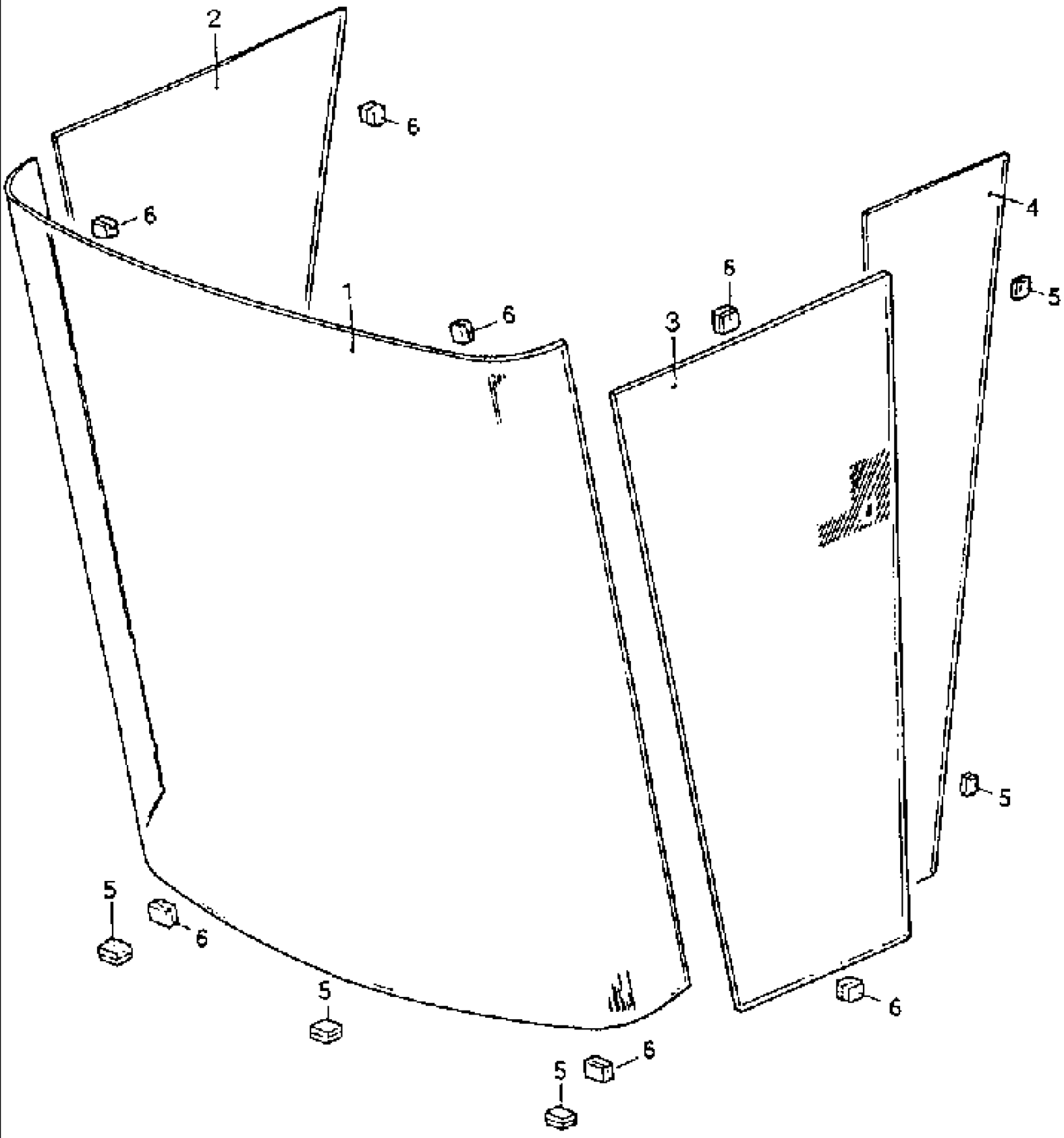

527 CASE IH COMBINE (1/98-12/98)

134 CAB WINDOW PANES

Ref	Part Number	Qty	Description
1	060509028	1	WINDSHIELD, front
2	060509036	1	GLASS, CAB, side, g
3	060509044	1	GLASS, door pane
4	060509052	1	GLASS, side pane f
5	03245703		PLUG, n.B.
6	03245752	19	PLUG,

135 SOUND INSULATION CAB

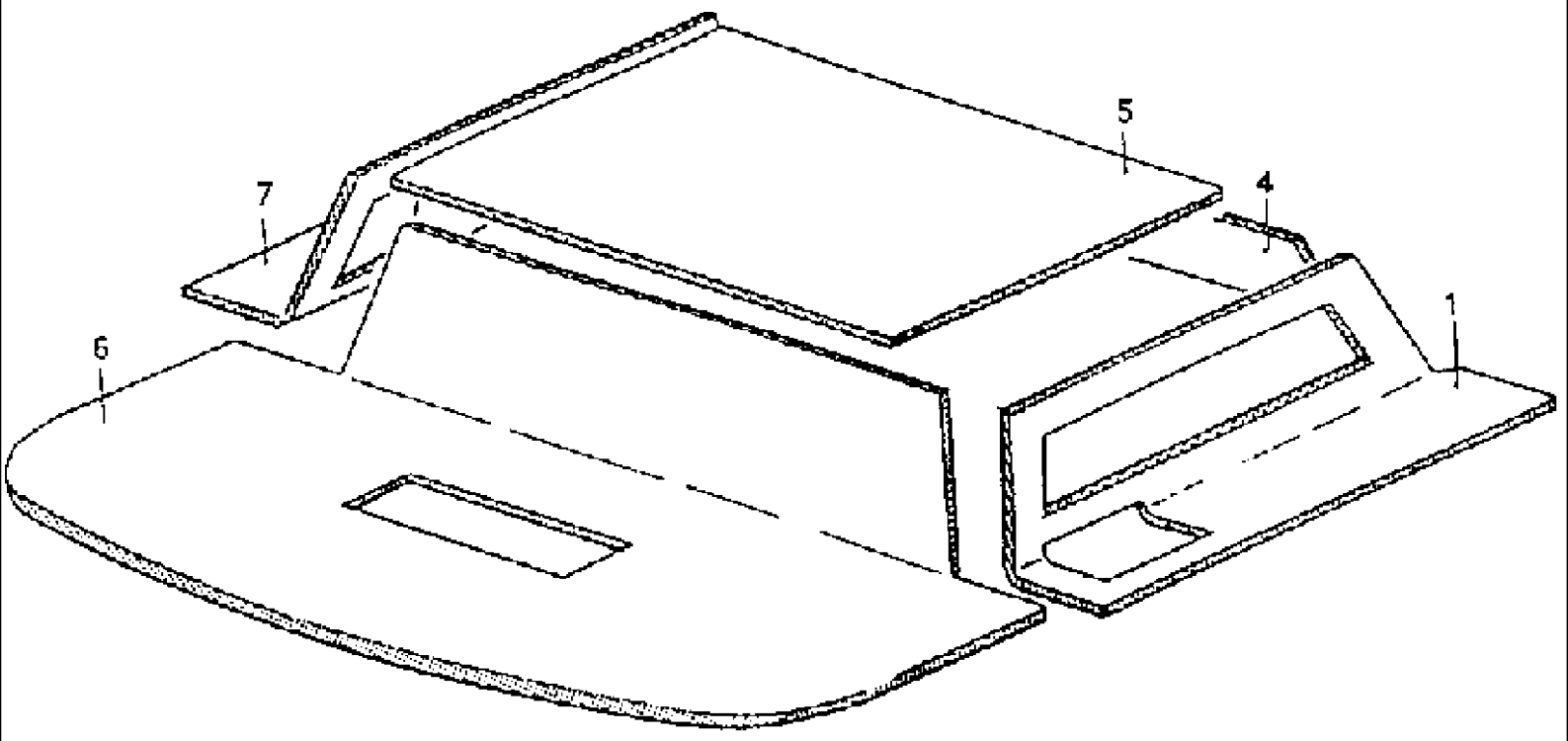

527 CASE IH COMBINE (1/98-12/98)

135 SOUND INSULATION CAB

Ref	Part Number	Qty	Description
1	03245808	1	INSULATOR, RUBBER,
2	03245857	1	SUPPORT,
4	03245904	1	INSULATOR, RUBBER,
5	03245953	1	INSULATOR, RUBBER,
6	03246005	1	INSULATOR, RUBBER,
7	03246054	1	INSULATOR, RUBBER,

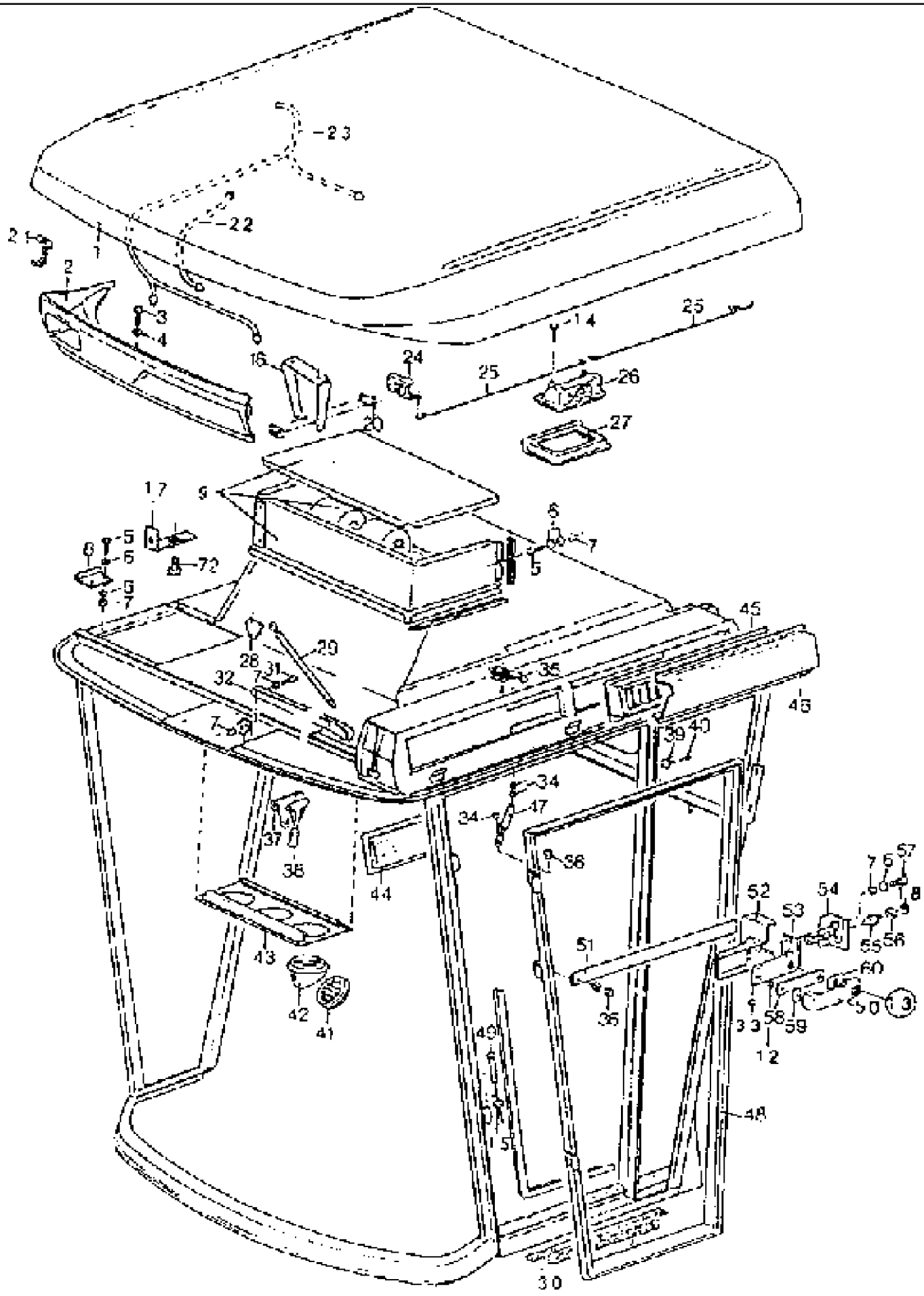
23
22
1
21
2
3
4
16
20
24
25
14
25
26
27
17
9
6
7
5
8
6
72
5
7
45
28
29
31
32
35
46
39
40
34
47
34
37
38
36
44
43
42
41
52
53
54
57
56
55
51
60
50
3
58
59
33
12
49
48
5
30

527 CASE IH COMBINE (1/98-12/98)

136 CAB

Ref	Part Number	Qty	Description
1	03245664	1	ROOF, cab
2	03245672	1	COVER, front
3	614-6010	12	BOLT, Hex, M6 x 10, 8.8, Full Thd, hex, M 6x10 -8.8
4	9961921593	5	WASHER, 6.6 x 22 x 2
5	614-8020	14	BOLT, Hex, M8 x 20, 8.8, hex, M 8 x 20 -8.8
6	9962924224	10	WASHER, 8.4
7	825-1408	15	NUT, M8, Cl 8,
8	03245680	2	HINGE,
9	03245697	1	VENTILATOR, blower
12	03246296	1	RING, bush
13	03246302	1	KEY, IGNITION, code 1008
13	03246310	1	KEY, IGNITION, code 201
14	614-6010	4	BOLT, Hex, M6 x 10, 8.8, Full Thd, hex, M 6 x 10 -8.8
15	03246327	2	SHIN, HOSE clamp
16	03245711	1	SUPPORT,
17	03245728	2	STIRRUP, bracket
18	234328N0	1	DISC, 13 x 26 x 3
20	03245736	2	STOP,
21	03245744		SHEET, RETAINING strap, n.B.
22	03245760	1	HARNESS, assy, wiring
23	03245777	1	HARNESS, ELECTRIC cable
24	03246335	1	LOCK, door, l.h.
24	03246343	1	LOCK, door, r.h.
25	03245785	2	STEM,
26	03245793	1	HANDLE, brake
27	03245816	1	HANDLE, cover
28	03245824	1	SUPPORT,
29	03245832	2	CYLINDER ASSY., ABSORBER shock
30	03245840	1	SHIELD,
31	614-8045	2	BOLT, Hex, M8 x 45, 8.8, Full Thd, hex, M 8 x 45 -8.8
32	03245865	2	LEVER,
33	03245873	5	PLUG,
34	03245881	7	RING, bearing, camshaft
35	03245898	4	LATCH, clip
36	03245912	3	PLUG,
37	03245920	1	FIXING BRACKET, HOSE clamp
38	03245937	1	HAMMER,
39	03245945	1	HOOK,
40	003795771	1	SCREW, plate
41	03245961	3	DEFLECTOR,
42	03245978	3	COVER, FLANGE cap
43	03245986	1	SUPPORT,
44	03245994	1	FILTER, assy
45	060152321	2	FILTER, assy
46	03246013	1	COVER,

Ref	Part Number	Qty	Description
47	03246021	1	CYLINDER ASSY., ABSORBER shock
48	03246038	1	CABIN DOOR,
50	03246046	1	HANDLE,
51	03246062	1	TUBE,
52	03246070	1	COVER,
53	03246087	1	SUPPORT,
54	03246095	1	LOCK ASSY,
55	03246101	1	STOP,
56	825-1408	1	NUT, M8, Cl 8,
57	614-8040	2	BOLT, Hex, M8 x 40, 8.8, Full Thd, hex, M8 x 40, 8.8, Full Thd
58	03246118	1	GASKET,
59	03246126	1	GASKET,
60	03246134	1	GASKET,

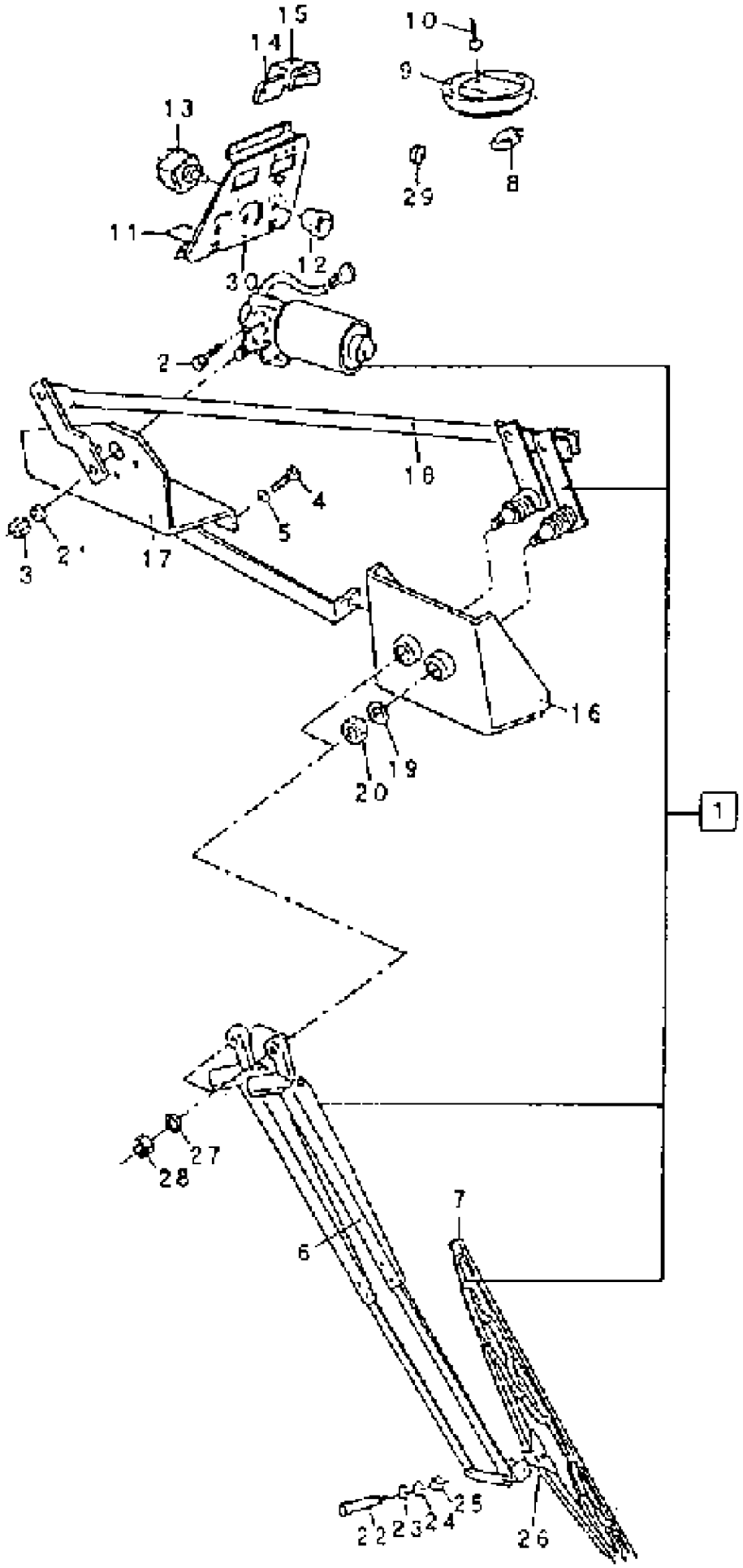
15
14
10
9
13
29
8
11
12
30
2
16
4
5
3
21
17
16
19
20
1
27
28
7
6
25
22
23
24
26

527 CASE IH COMBINE (1/98-12/98)

138 WINDSCREEN WIPER

Ref	Part Number	Qty	Description
1	03246142	1	WIPER MOTOR, kit
2	614-6020	3	BOLT, Hex, M6 x 20, 8.8, hex, M6 x 20
3	825-1408	1	NUT, M8, Cl 8,
4	614-8020	2	BOLT, Hex, M8 x 20, 8.8, hex, M 8 x 20 -8.8
5	9961920100	2	WASHER, SPRING, B18
6	03246150	2	WIPER ARM, assy. 1 m
7	03246167	1	BLADE, WIPER, windshield
8	060506330	1	BULB, 24V, max 10W
9	03246175	1	HEADLIGHT, assy
10	9936939152	2	SCREW, cylinder-head, M 4 x 16
11	03246183	1	SUPPORT,
12	03246191	1	END FITTING, knob
13	03246206	1	SWITCH,
14	03246214	1	PLUG,
15	03246222	1	SWITCH,
16	03246230	1	SUPPORT,
17	03246247	1	SUPPORT,
18	03246255	1	LEVER,
19	9961911212	2	WASHER, LOCK, spring, A 12
20	829-1412	1	NUT, M12, Cl 10, hex, M 12
21	9961910976	1	SPRING, ring, A 8
22	614-4020	1	BOLT, Hex, M4 x 20, 8.8, Full Thd,
23	9961919888	1	WASHER, SPRING, B 4
24	9961910613	1	WASHER, LOCK, spring, A 4
25	825-1404	1	NUT, M4, Cl 8,
26	03246288	1	SUPPORT, ELEMENT sealing
27	9961911085	2	WASHER, LOCK, spring, A 10
28	825-1410	2	NUT, M10, Cl 8,
29	03246263		RING, BUSH rubber, n.B.
30	03246271	1	DECAL,

139 OIL TANK

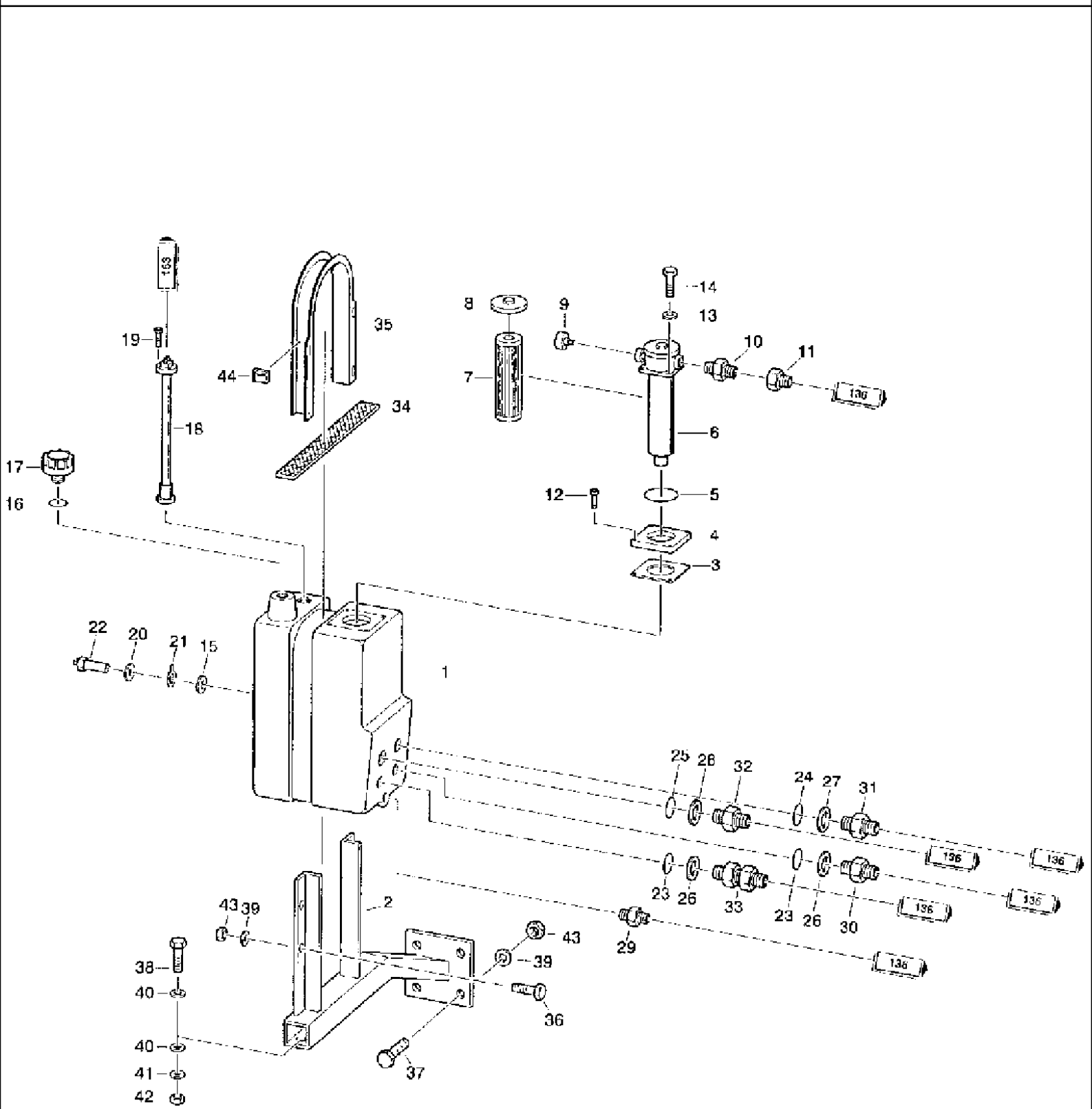
153
19
44
35
34
18
17
16
8
9
14
13
10
11
136
7
6
12
5
4
3
22
20
21
15
1
25
26
32
24
27
31
23
26
33
23
26
30
29
2
43
39
38
40
40
41
42
36
37

527 CASE IH COMBINE (1/98-12/98)

139 OIL TANK

Ref	Part Number	Qty	Description
1	061051461	1	TANK, Pa-50 l
2	060142207	1	FRAME,
3	061065780	1	GASKET, flat
4	061052108	1	ADAPTION, ARGO-INF nipple
5	060527087	1	O-RING, 88 x 3
6	061051654	1	FILTER, return
7	060526945	1	FILTER, ELEMENT, 320
8	060527062	1	COVER, locking
9	060527095	1	INDICATOR, contamination monitoring
10	003781243	1	ADAPTER, male-end, GE35-LR
11	060522982	1	FITTING, g-type, RED35/28-L
12	9937939030	4	SCREW, cheese-head, M 10 x 25
13	9999853117	4	PLATE, LOCKING, washer, VSF M 8
14	9933929715	4	SCREW, hex M 8 x 18
15	072072166	1	SEALRING, flat
16	9907916118	1	O-RING, 22 x 5
17	072051780	1	FILTER, ventilation, TBF
18	060512835	1	SHARE, LARGE, SWITCH float
19	060526793	3	SCREW, cheese-head, M 5 x 20
20	9970908312	1	GASKET, A 14 x 18 VF
21	061051687	1	CONNECTION, earth
22	060511408	1	SWITCH, temperature, 92 C
23	9907915455	2	O-RING, 40 x 3
24	060526648	1	O-RING, 50 x 3
25	9907915584	1	O-RING, 56 x 3
26	061051566	2	RING, 22-L
27	061051574	1	RING, 28-L
28	061051582	1	RING, 35-L
29	003784961	1	ADAPTER, screwing, GE 18-LM
30	003433475	1	ADAPTER, screwing, GE 22-LM
31	060515276	1	ADAPTER, screwing, GE 28-LM
32	003433418	1	ADAPTER, screwing, GE 35-LM
33	060515251	1	VALVE, CHECK, non-return
34	061051701	1	BAND, STRIP rubber
35	061051494	1	ANCHOR, Fastening
36	9933930001	4	SCREW, hex, M 8 x 20 -8.8
37	006340781	4	SCREW, hex, M 8 x 16 -8.8
38	006344037	1	SCREW, hex, M 10 x 25 -8.8
39	9999853117	8	PLATE, LOCKING, washer, VSF M 8
40	4221620616	2	WASHER,
41	9999853094	1	PLATE, LOCKING, washer, VSF M 10
42	006213935	1	NUT, hex, M 10
43	006213830	8	NUT, hex, M 8
44	007067064	1	CLAMP, cable

141 PLATFORM, LIFTING DEVICE - HLS

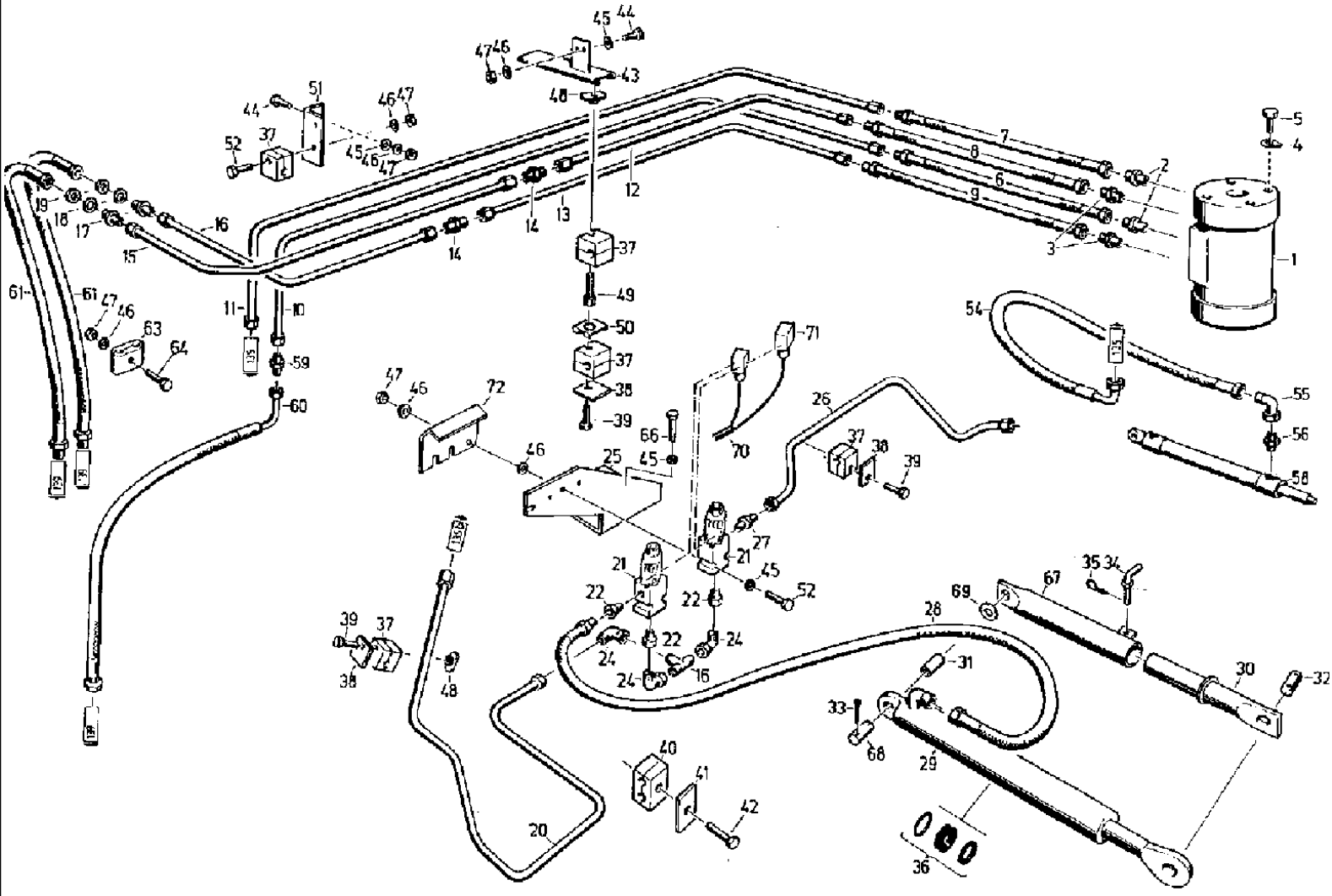

527 CASE IH COMBINE (1/98-12/98)

141 PLATFORM, LIFTING DEVICE - HLS

Ref	Part Number	Qty	Description
1	060504474	1	STEERING ASSY, OSPC 160 ON
2	003791663	2	ADAPTER, male-end
3	9969059404	2	ADAPTER, male-end
4	9962923578	4	PLATE, LOCKING, washer 10.5
5	9933929065	4	SCREW, hex, M10 x 20 -8.8
6	003793825	1	HOSE, line, PHD 210x560 AOL HL
7	003793817	1	HOSE, line, PHD 110x450 AFL HL
8	003793794	1	HOSE, line, PHD 208x450 AFS HS
9	003793800	1	HOSE, line, PHD 208x560 AFS HS
10	4260715995	1	TUBE ASSY., D 2.5
11	061065852	1	TUBE ASSY., R 9.2
12	4260716014	1	TUBE ASSY., LL 1
13	4260716047	1	TUBE ASSY., LR 1
14	003606342	2	UNION,
15	4260716022	1	TUBE ASSY., LL 2
16	9999850307	1	UNION,
17	003433797	2	UNION,
18	9965921372	2	WASHER, 22 x 36 x 5
19	003433346	2	NUT, lock, GM 12-S
20	061037100	1	TUBE ASSY., HV 1.1
21	072052267	2	VALVE,
22	060512650	3	ADAPTER, male-end
23	060513908	1	LINK DRAG, connection
24	003609111	3	ELBOW, FITTING w-type
25	061051750	1	RETAINER,
26	061052204	1	TUBE, HYD, HV 2.2
27	9999851277	1	ADAPTER, male-end
28	003793833	2	HOSE, line
29	061010718	2	CYLINDER, hydraulic, 60/55x630
30	061019670	2	STEM, support
31	4240023780	4	BUSHING, spacer
32	4240023797	2	PIN, LARGE, bolt
33	9963950828	8	PIN, SPLIT (COTTER), 8 x 50
34	9928939634	2	PIN, SPLIT (COTTER), handle, 30 x 70
35	060508814	2	SPLIT PIN/SAFETY PIN, hair, cotter
36	060526182	2	KIT, GASKET, P55
37	006646267	7	CIRCLIP, body, 112 PP
38	006646250	6	COVER, plate, DP 1
39	9933929450	4	SCREW, hex, M6 x 30 -8.8
40	006646218	1	CIRCLIP, body, 112/12 PP
41	006646291	1	COVER, plate, GD 1D
42	9933959987	1	SCREW, hex, M 6 x 35 -8.8
43	4260716192	1	BLOCK, SUPPORT pipe, 6
44	9930977163	4	SCREW, hex, M 6 x 20 -8.8
45	006510927	14	WASHER, A 6.4

527 CASE IH COMBINE (1/98-12/98)

141 PLATFORM, LIFTING DEVICE - HLS

Ref	Part Number	Qty	Description
46	9999853100	22	PLATE, LOCKING, washer, VSF M 6
47	006213734	19	NUT, hex, M 6-8
48	006646138	2	NUT, SM
49	006646146	2	SCREW, AF 1
50	006646195	2	PLATE, LOCKING, SIG 1
51	4260716184	1	ANGLE BAR,
52	006339257	6	SCREW, hex, M6 x 45 -8.8
54	060504851	2	HOSE, line, PHD106 x 1200 AFL AFL90
55	003799687	2	ELBOW, w-fitting
56	060532927	2	ADAPTER, male-end, GE8-L/M16x1,5-ED
58	4240054096	1	CYLINDER ASSY., hydraulic
59	9999850083	1	UNION, XG 12-L
60	003793737	1	HOSE, line
61	060505684	2	HOSE, line
63	003793921	1	CLAMP, double
64	9933960417	1	SCREW, hex, M6 x 40 -8.8
65	003783960	4	SCREW, M6 x 60 -8.8
66	006338713	4	SCREW, hex, M6 x 25 -8.8
67	4240023764	2	TUBE, holding
68	061016602	2	PIN, LARGE, bolt
69	9960962344	4	WASHER, A 37
70	061033410	1	CABLE ASSY.,
71	060521137	2	SOCKET, POWER, BOX cable junction
72	061052630	1	COVER, PROTECTIVE,

143 DIRECTIONAL CONTROL VALVE 527-160 - HLS

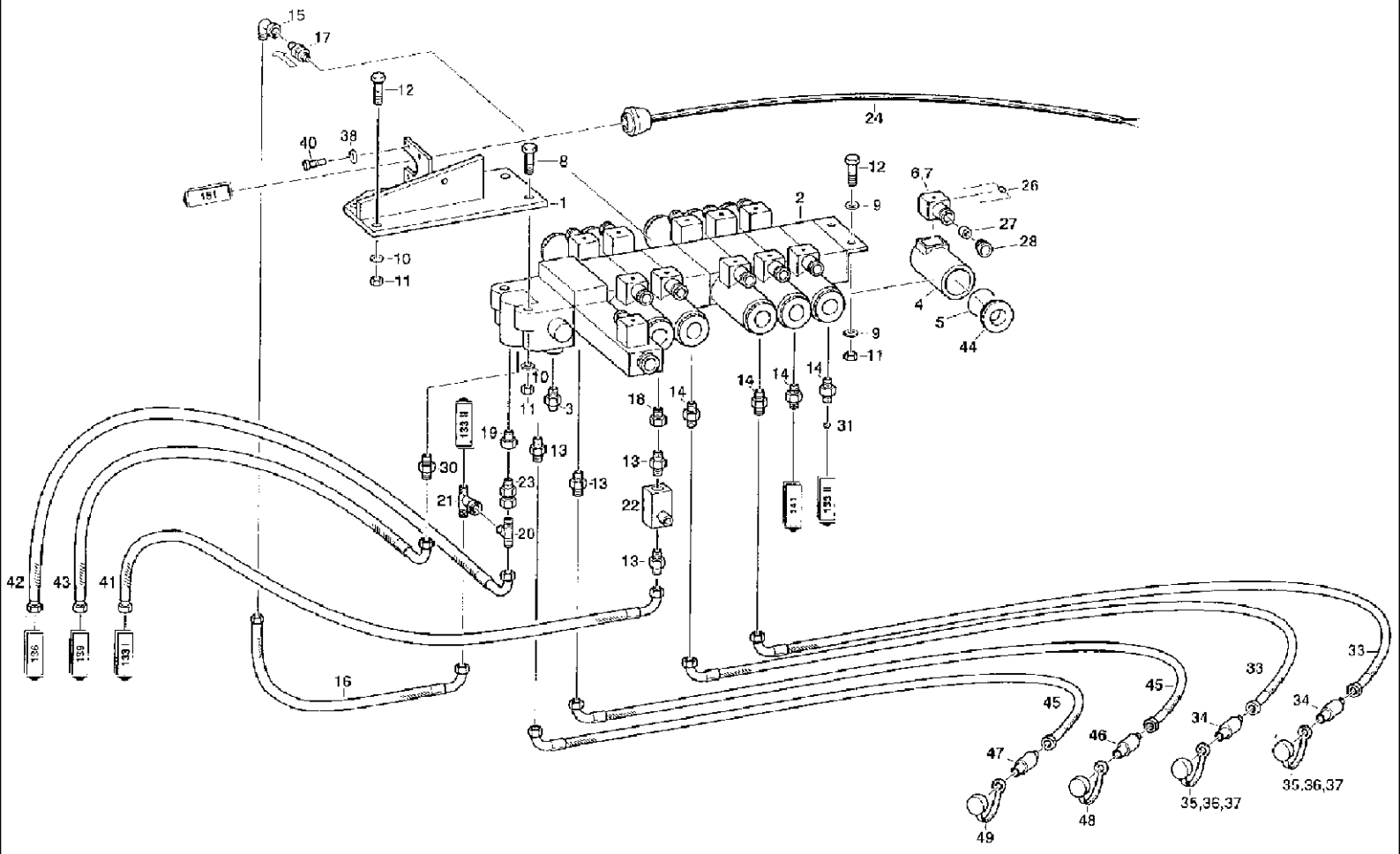

527 CASE IH COMBINE (1/98-12/98)

143 DIRECTIONAL CONTROL VALVE 527-160 - HLS

Ref	Part Number	Qty	Description
1	061033708	1	VALVE, suspension
2	061065860	1	VALVE, CONTROL, directional, SP 08 - 527- 98
3	003781428	1	VALVE, PRESSURE RELIEF, limiting, DB 02 K2 - 1x/315 M 180 bar
4	060509286	9	SPINDLE, coil, GZ 45 -4 -24 V
5	060509300	9	O-RING,
6	003781444	7	CONTACT, plug gr, Z4-GDM-2011-RE-A
7	003781452	5	CONTACT, plug sw, Z4-GDM-2011-RE-B
8	006334131	2	SCREW, hex, M 8 x 45 -8.8
9	006576068	4	DISC, locking, VSF B 8
10	9999853117	4	PLATE, LOCKING, washer, VSF M 8
11	006213830	8	NUT, hex, M 8 -8
12	9933930001	4	SCREW, hex, M 8 x 20 -8.8
13	9999851277	4	ADAPTER, male-end, GE 12-LR-ED/OMD
14	003432722	7	ADAPTER, male-end, GE8-L/R 3/8 - ED/OMD
15	003609111	1	ELBOW, FITTING w-type, EW 12-L/OMD
16	060521186	1	HOSE, line, PHD 110x300 AOL AOL90
17	060521194	1	VALVE, CHECK, RHD 12-LR-ED/OMD
18	060512650	1	ADAPTER, male-end, EGE 12 - LR-ED/OMD
19	003793995	1	ADAPTER, male-end, EGE 18 - PLR - ED
20	060532951	1	UNION, XTR 28/12/28-L
21	4240030868	1	CONNECTOR, HYD., T, ET 12-L/OMD
22	060520601	1	VALVE, throttle nonreturn, EDRV-10
23	060532968	1	NUT, TUBE, G fitting RED 28/18-L
24	061033283	1	LINE, X11
26	9019973661	10	DIODE, SY 360/1
27	9972876816	11	GROMMET, cable, A 4 x 1.5
28	9965962315	11	WASHER, B 5.3
30	003433467	1	ADAPTER, male-end, GE 15-L/R 3/8 - ED/OMD
31	4260688804	1	ORIFICE, restrictor, 8-7
33	003793753	3	HOSE, line, PHD 106 x 1600 AFL AFL90
34	003798862	3	HALF COUPLING, SKL 06 HL 3
35	9901059367	1	GUARD, dust rt, SKL Zubs 3
36	003793938	1	GUARD, cap bl, SKL Zubs 3
37	9901059383	1	GUARD, cap gn, SKL Zubs 3
38	006003532	4	SCREW, cylinder, M 3 x 8 -5.8
40	9960919823	4	WASHER, A 3.2
41	003793841	1	HOSE, line, PHD 210 x 930 HL AOL90
42	060533220	1	HOSE, line, PHD 125 x 7600 AOL AOL90
43	003793720	1	HOSE, line, PHD 213 x 930 HL AOL90
44	060509294	10	NUT, GZ 45
45	061033757	2	HOSE, line, PHD 210 x 1800 AOL AOL90
46	061033765	1	SLEEVE, TRANSMISSION, HALF coupling, SKL 10 HL3
47	061033773	1	SLEEVE, TRANSMISSION, HALF coupling, SKL 10 HL4
48	061033781	1	GUARD, dust ge, SKL Zubs 3
49	061033798	1	GUARD, dust, SKL Zubs 4

145 PIPING, ENGINE

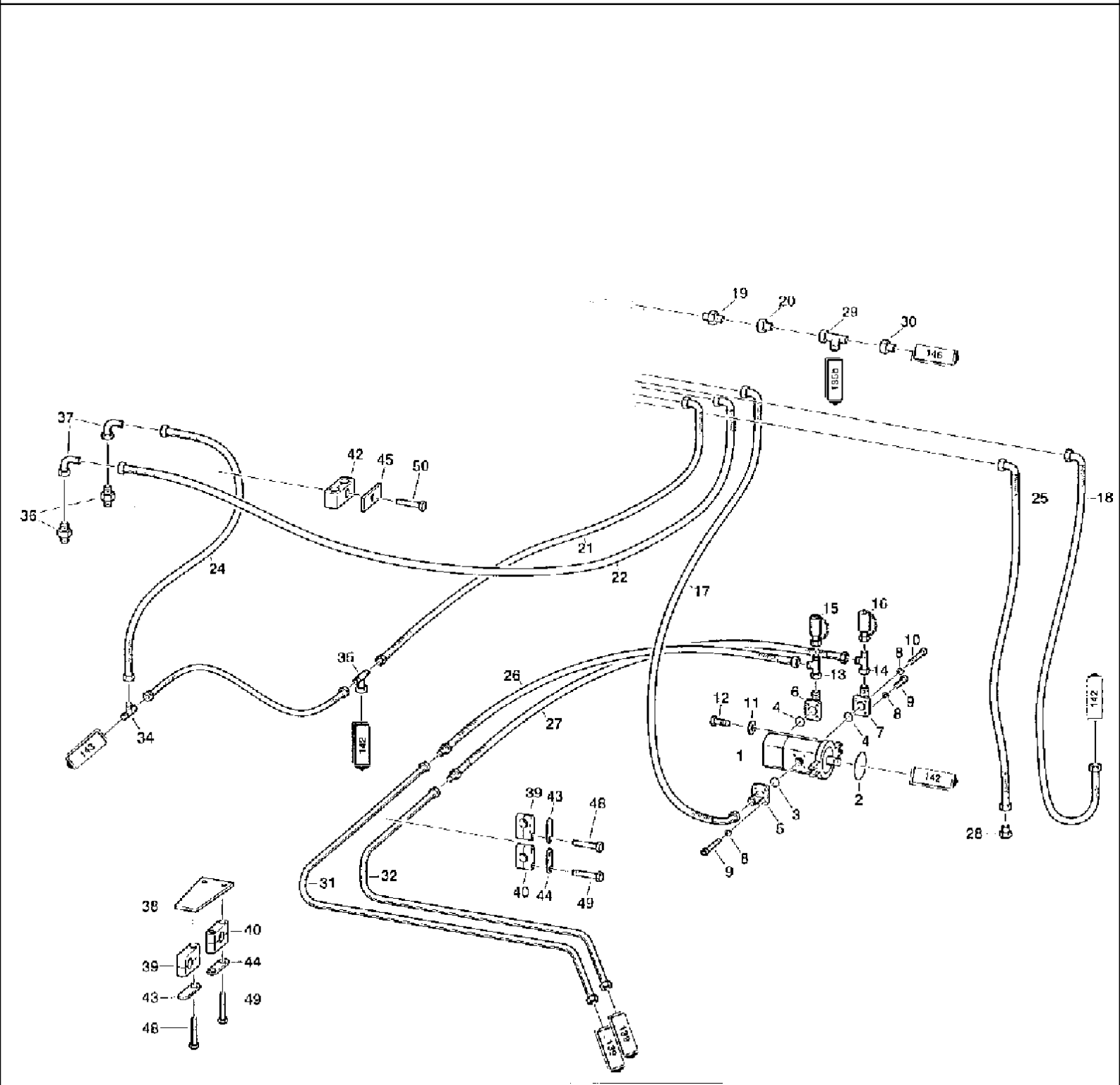

527 CASE IH COMBINE (1/98-12/98)

145 PIPING, ENGINE

Ref	Part Number	Qty	Description
1	060526623	1	PUMP, gear-type, PNN19-6
2	060527142	1	O-RING, 82, 27 x 1.78
3	001129605	1	O-RING, 26 x 2.5
4	9999854753	2	O-RING, 20 x 2.5
5	003610958	1	FITTING, flange, L 28/40
6	003793038	1	FLANGE, fitting, L 12/35
7	003783663	1	FLANGE, fitting, L 15/35
8	006455742	12	WASHER, LOCK, spring, B 6
9	9936984856	8	SCREW, cheese-head, M 6 x 22 -10.9
10	003780900	4	SCREW, cheese-head, M 6 x 35 -10.9
11	9960921787	2	WASHER, A 10.5
12	060506306	2	SCREW, hex, 3/8"-16UNC
13	003432554	1	FITTING, L, EL 12-L
14	003433555	1	FITTING, L, EL 15-L
15	9019059286	1	FITTING, gauge port, VKA 3/12-L
16	003433563	1	FITTING, gauge port, VKA 3/15-L
17	060526760	1	HOSE, PSG 125 x 1000 AOL 90
18	060506291	1	HOSE, PSG 132 x 1600 AOL 90
19	003781243	1	ADAPTER, GE 35-LR-ED
20	060522982	1	FITTING, g, RED 35/28-L
21	060505258	1	HOSE, PHD 120 x 500 AFL AFL 45
22	060505241	1	HOSE, PHD 120 x 2350 AFL AFL 90
23	060505305	1	HOSE, PHD 120 x 1000 AFL AFL 45
24	060505313	1	HOSE, PHD 120 x 1350 AFL AFL 45
25	060526711	1	HOSE, PND 316 x 2500 AOL AOL 90
26	060525487	1	HOSE, PHD 210 x 850 AOL HL
27	003785142	1	HOSE, PHD 213 x 850 AOL HL
28	060526728	1	VANEUM GAUGE, SCREW locking
29	003433522	1	FITTING, L
30	060533212	1	FITTING, G
31	061010541	1	TUBE ASSY., D 2.1
32	061010525	1	TUBE ASSY., D 1.1
34	060150155	1	UNION, T 22-L
35	003433475	1	ADAPTER, ET 22-L
36	003433475	2	ADAPTER, GE 22-LM
37	003433434	2	FITTING,
38	061010252	1	BLOCK, SUPPORT pipe, 10
39	006646267	3	CIRCLIP, body, 112 PP
40	006646283	3	CIRCLIP, body, 215 PP
42	006646066	1	CIRCLIP, body, 430/30 PPH
43	006646250	3	COVER, plate, DP 1
44	006646275	3	COVER, plate, DP 2
45	003781918	1	COVER, plate, GD 4D
48	9933929450	3	SCREW, hex, M 6 x 30
49	9933959987	6	SCREW, hex, M 6 x 35

Ref	Part Number	Qty	Description
50	006334180	1	SCREW, hex, M 8 x 50

147 PIPING, RIGHT SIDE-WORKING HYDR. SYSTEM

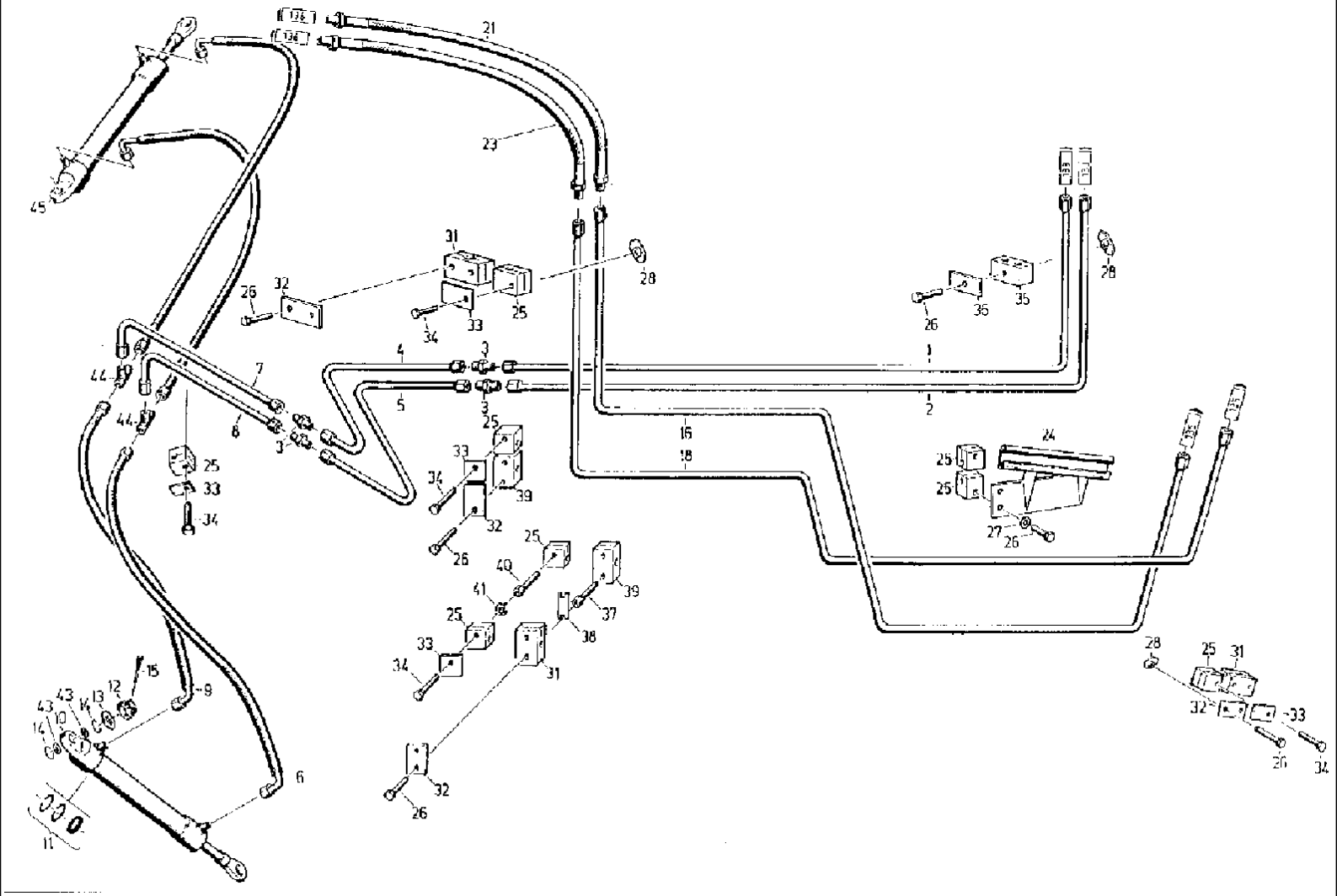

527 CASE IH COMBINE (1/98-12/98)

147 PIPING, RIGHT SIDE-WORKING HYDR. SYSTEM

Ref	Part Number	Qty	Description
1	4260716096	1	PIPE, LL 4
2	061010775	1	TUBE ASSY., LR 4
3	003606342	4	UNION, XG 12-S
4	061010750	1	TUBE ASSY., LL 5
5	061010783	1	TUBE ASSY., LR 5
6	060504441	2	HOSE, PHD 208 x 900 AFSAFS 90
7	061010767	1	TUBE ASSY., LL 6
8	061010791	1	TUBE ASSY., LR 6
9	060504433	2	HOSE, PHD 208 x 700 AFSAFS 90
10	060054674	1	CYLINDER ASSY., B 2-40/18 x 250
11	003781372	2	KIT, GASKET,
12	9951894525	4	NUT, castellated, M 16 -17H
13	9965919265	4	WASHER, 18 x 40 x 4
14	060504425	8	O-RING, 25 x 5
15	9963950032	4	PIN, SPLIT (COTTER), 4 x 32
16	061010558	1	TUBE ASSY., D 2.3
18	061010533	1	TUBE ASSY., D 1.4
21	060150713	1	HOSE, PHD 110 x 980 HL HL
23	060150658	1	HOSE, PHD 213 x 850 HL HL
24	061010277	1	BLOCK, SUPPORT pipe, 11
25	006646267	17	CIRCLIP, 112 PP
26	9933959987	21	SCREW, hex, M 6 x 35 -8.8
27	9999853100	2	PLATE, LOCKING, washer, VSF M6
28	006646138	9	NUT, SM
31	006646283	4	CIRCLIP, 215 PP
32	006646275	7	COVER, plate, DP 2
33	006646250	11	COVER, plate, DP 1
34	006339257	9	SCREW, hex, M 6 x 45 -8.8
35	006646218	1	CIRCLIP, 112/12 PP
36	006646291	1	COVER, plate, GD 1 D
37	006646154	2	SCREW, AF 2
38	006646201	1	PLATE, LOCKING, SIG 2
39	006646226	4	CIRCLIP, 212 PP
40	006646146	2	SCREW, AF 1
41	006646195	2	PLATE, LOCKING, SIG 1
43	061016764	8	SPACER, disk
44	9969946633	2	UNION, XT-12 S
45	061017113	1	CYLINDER ASSY., 40/18x250

149 PIPING, UNLOADING AUGER - HLS

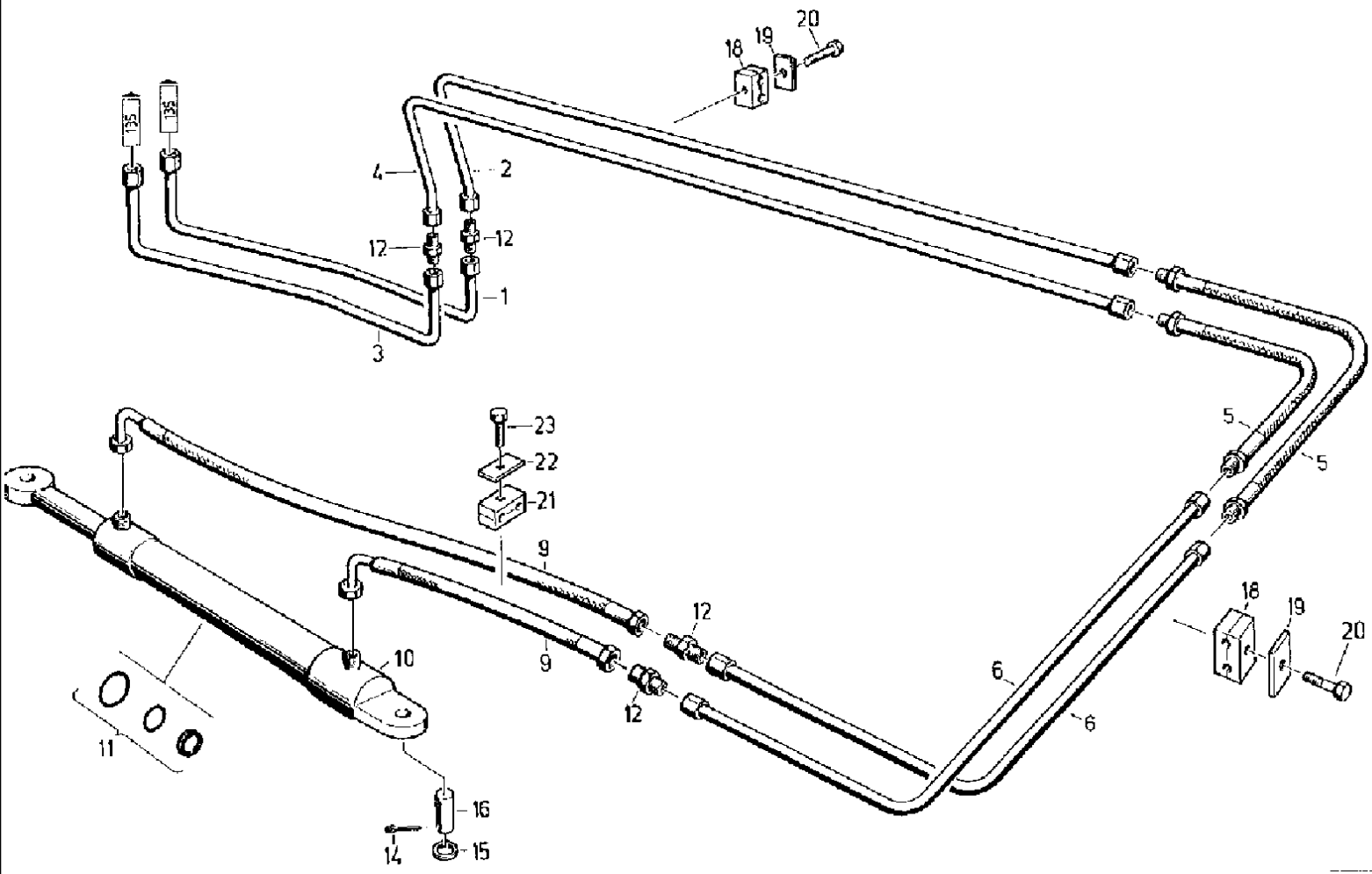

527 CASE IH COMBINE (1/98-12/98)

149 PIPING, UNLOADING AUGER - HLS

Ref	Part Number	Qty	Description
1	061033732	1	TUBE, HYD, ARA 1.1
2	061010590	1	TUBE ASSY., ARA 1.2
3	061033740	1	TUBE, HYD, ARB 1.1
4	061010621	1	TUBE ASSY., ARB 1.2
5	003793673	2	HOSE, PHD 206 x 630 HL HL
6	061010605	2	TUBE, HYD, ARA 2
9	003799115	1	HOSE, PHD 206 x 1100 AOL AOL90
10	061031595	1	CYLINDER ASSY., 50/25 x 480
11	060518133	1	KIT, GASKET, 50/25
12	9969946801	3	UNION, XG 8 - L
13	003432722	2	ADAPTER, screwing, GE8-L/R3/8-ED
14	9963950274	4	PIN, SPLIT (COTTER), 5 x 32
15	061032756	4	SPACER, disk
16	9949864924	2	PIN, LARGE, 20 x 70 x 54
18	006646187	6	CIRCLIP, 108/08 PP
19	006646291	6	COVER, plate, GD 1 D
20	9933959987	6	SCREW, hex, M 6 x 35 -8.8
21	006646170	1	CIRCLIP, 216/16 PPH
22	006646242	1	COVER, plate, GD 2 D
23	006341485	1	SCREW, bolt, M 8 x 35 -8.8

150 PROPULSION SYSTEM HYFA-PUMP, S

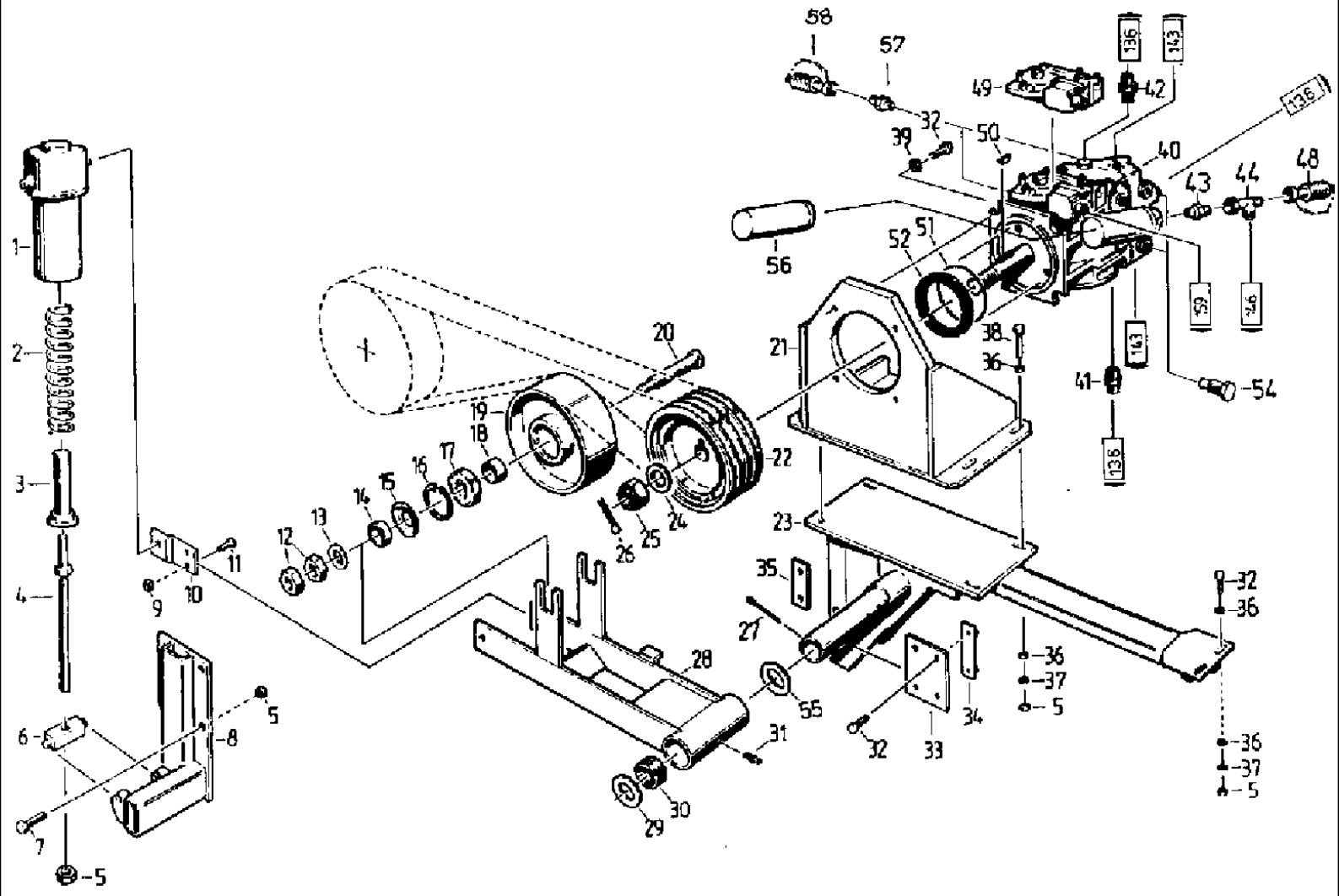

527 CASE IH COMBINE (1/98-12/98)

150 PROPULSION SYSTEM HYFA-PUMP, S

Ref	Part Number	Qty	Description
1	4260708770	1	SPRING, retainer
2	003793882	1	SPRING, COMPRESSION, pressure, C 7 x 63 x 17.5
3	4260708545	1	STEM, GUIDE spindle
4	4260708561	1	SPINDLE,
5	006214140	10	NUT, hex, M 12 -8
6	4260708553	1	SUPPORT, spindle
7	006346408	4	SCREW, hex, M 12 x 20 -8.8
8	061001227	1	SUPPORT, back rest
9	006213935	2	NUT, hex, M 10 -8
10	4260708787	1	PROTECTION PLATE,
11	006343880	2	SCREW, hex, M 10 x 22 -8.8
12	9950896343	2	NUT, hex, M 24 x 2 -04
13	9960962930	1	WASHER, A 25
14	4240029497	2	BUSHING,
15	4240029511	2	SEAL WASHER,
16	9964917826	2	CIRCLIP, 72 x 2.5
17	9902890505	2	BEARING, ball, 6207 RS
18	4240029480	1	BUSHING,
19	4240029503	1	ROLLER, SHIFTER,
20	4240029472	1	PIN, LARGE, bolt
21	4260708184	1	SUPPORT, TRESTLE pump
22	061005585	1	PULLEY ASSY.,
23	4260713960	1	BODY, frame
24	060504915	1	WASHER, 30
25	060506628	1	NUT, castle, 1 - 20 UNEF
26	060506636	1	PIN, SPLIT (COTTER),
27	9963950514	1	PIN, SPLIT (COTTER), 8 x 63
28	061029447	1	LEVER, ROCKER,
29	9965923534	1	WASHER, 42 x 55 x 4
30	4241021230	2	BUSHING,
31	003617056	1	NIPPLE, LUBE, AM 8 x 1
32	006346666	14	SCREW, hex, M 12 x 30 -8.8
33	4260708537	2	COVER, plate
34	4260708498	4	FITTING, plug-in, M 12
35	061021407	1	FITTING, plug-in unit
36	4250132814	11	WASHER,
37	006501557	9	WASHER, SPRING, B 12
38	9933932028	4	SCREW, hex, M 12 x 35 -8.8
39	9965924752	4	WASHER, 14 x 25 x 4
40	060526631	1	HYDROSTATIC PUMP, DELIVERY variable, 90 L 100 - 97
41	060504876	1	ADAPTER, male-end, GE 35-L/1 5/8-12UN
42	060504892	1	ADAPTER, male-end, GE 22-L/1 1/16-12UN
43	060504884	1	ADAPTER, male-end, GE 12-L/ 9/16-18UNF
44	003432554	1	FITTING, L, EL12-L
48	9019059286	1	FITTING, piece

150 PROPULSION SYSTEM HYFA-PUMP, S

Ref	Part Number	Qty	Description
49	060506597	1	VALVE, servo adjusting
50	060506644	1	SPRING, plate
51	060506611	1	O-RING, round
52	060506603	1	GASKET,
54	060512642	2	VALVE,
55	9965962171	2	WASHER, 42 x 60 x 3
56	060526937	1	FILTER, ELEMENT,
57	060533140	2	FITTING, male-end, GE 12-S/9/16 - 18 UNF
58	060533157	2	FITTING, screwing, VKA 3/12-S/A3C

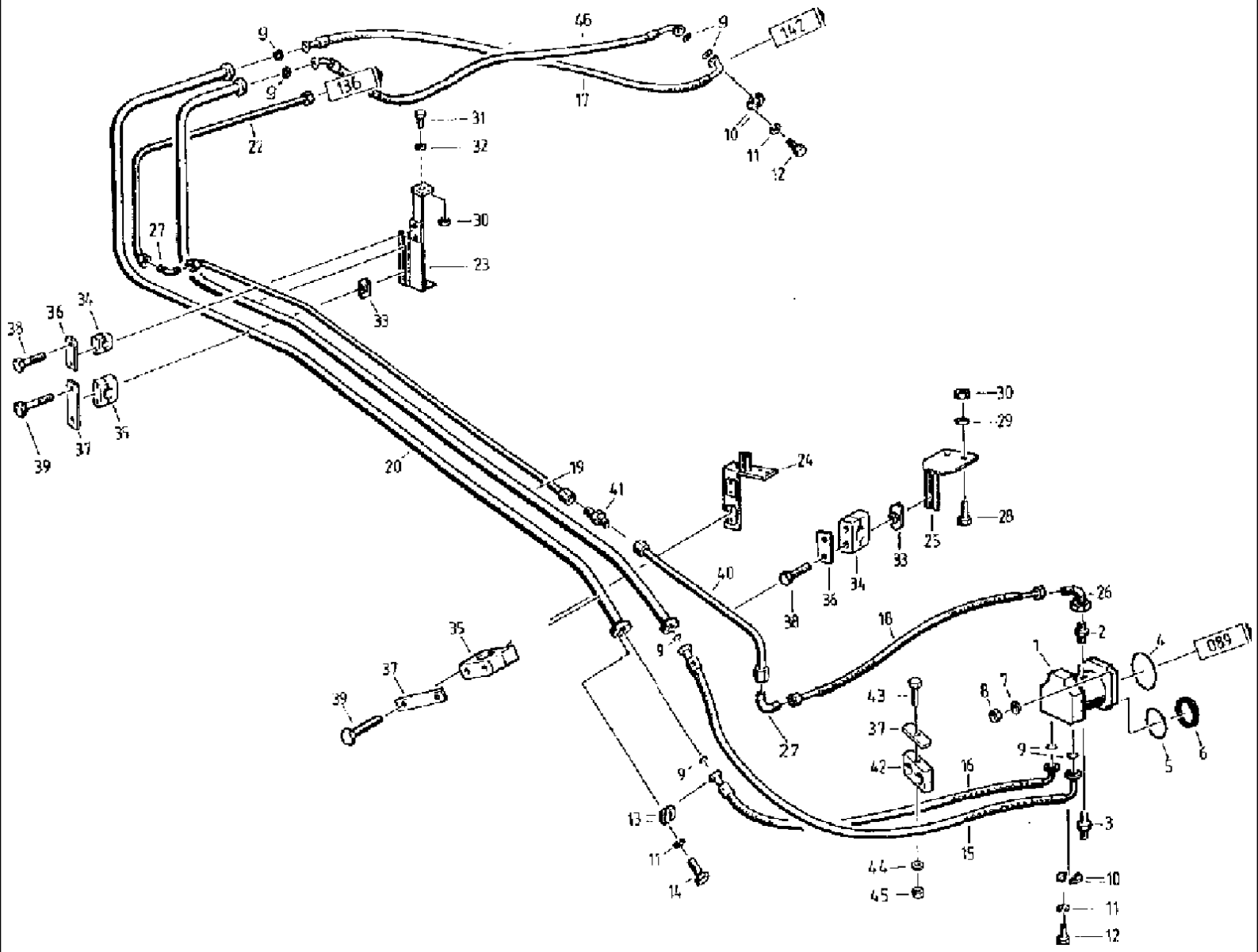
9
46
9
142
136
17
22
31
32
10
11
12
30
27
23
33
34
36
38
39
37
35
20
19
41
24
30
29
28
25
33
34
36
38
40
26
16
2
4
089
1
7
8
43
37
42
9
16
5
6
3
15
44
45
10
11
12
27
35
37
39
9
13
11
14

527 CASE IH COMBINE (1/98-12/98)

152 PROPULSION SYSTEM, S-S

Ref	Part Number	Qty	Description
1	060504931	1	MOTOR, HYDRAULIC, CAPACITY fixed, 90 M 100
2	060504892	1	ADAPTER, screw
3	060168997	1	POPPET, VALVE,
4	060150311	1	O-RING, round, 125 x 3
5	060506611	1	O-RING, round
6	060506603	1	GASKET, SHAFT rotary
7	4250132814	4	WASHER, 12, 3 x 24 x 4
8	006214140	4	NUT, hex, M 12 -8
9	003114051	8	O-RING, round, 32, 92 x 3, 53
10	060505338	8	FLANGE ASSY, half, SFH 6 25
11	9961911204	32	WASHER, LOCK, spring, B 12
12	060505346	16	SCREW, hex, 7/16"-14UNC x 45
13	060151667	8	FLANGE ASSY, half, SFH 6 25
14	006347007	16	SCREW, hex, M 12 x 45 -8.8
15	060526744	1	HOSE, PHD 525 x 1900 SF6 SF6 90
16	060526752	1	HOSE, PHD 525 x 2100 SF6 SF6 90
17	060526736	1	HOSE, PHD 525 x 800 SF6 SF6 90
18	9908951747	1	HOSE, PHD 120 x 1400 AFL AFL
19	061005407	1	TUBE ASSY., main, 1
20	061005423	1	TUBE ASSY., main, 2
21	061028358	1	HOSE, FLEXIBLE, OIL overflow, 1.1
22	061027646	1	HOSE, FLEXIBLE, OIL overflow, 2
23	4260708473	1	HOLDER, SUPPORT pipe, 2
24	061005464	1	BLOCK, SUPPORT pipe, 8
25	061027654	1	SUPPORT, SUPPORT pipe, 9
26	003433522	1	FITTING, screwing, EW 22-L
27	003780041	2	UNION, W22-L
28	9933929173	2	SCREW, hex, M 8 x 25 -8.8
29	4260689114	2	WASHER,
30	006213830	4	NUT, hex, M 8 -8
31	9933930001	2	SCREW, hex, M 8 x 20 -8.8
32	9960921633	1	WASHER, A 8.4
33	006646138	8	NUT, rail, SM
34	006646033	4	CIRCLIP, body, 322 PP
35	006646058	6	CIRCLIP, body, 538 PP
36	006646347	4	COVER, plate, DP 3
37	006646017	8	COVER, plate, DP 5
38	9933960417	8	SCREW, hex, M 6 x 40 -8.8
39	9933960048	12	SCREW, hex, M 6 x 60 -8.8
40	061028374	1	TUBE ASSY., OIL overflow, 1.2
41	9969946930	1	UNION, linking, XG 22-L
42	060516051	2	CIRCLIP, body, 540 PPH
43	9932977651	4	SCREW, hex, M 6 x 80 -8.8
44	9999853100	4	PLATE, LOCKING, washer, VSF- M6
45	9950895728	4	NUT, hex, M 6-8

Ref	Part Number	Qty	Description
46	060526270	1	HOSE, PHD 525 x 970 SF6 45 SF6 90

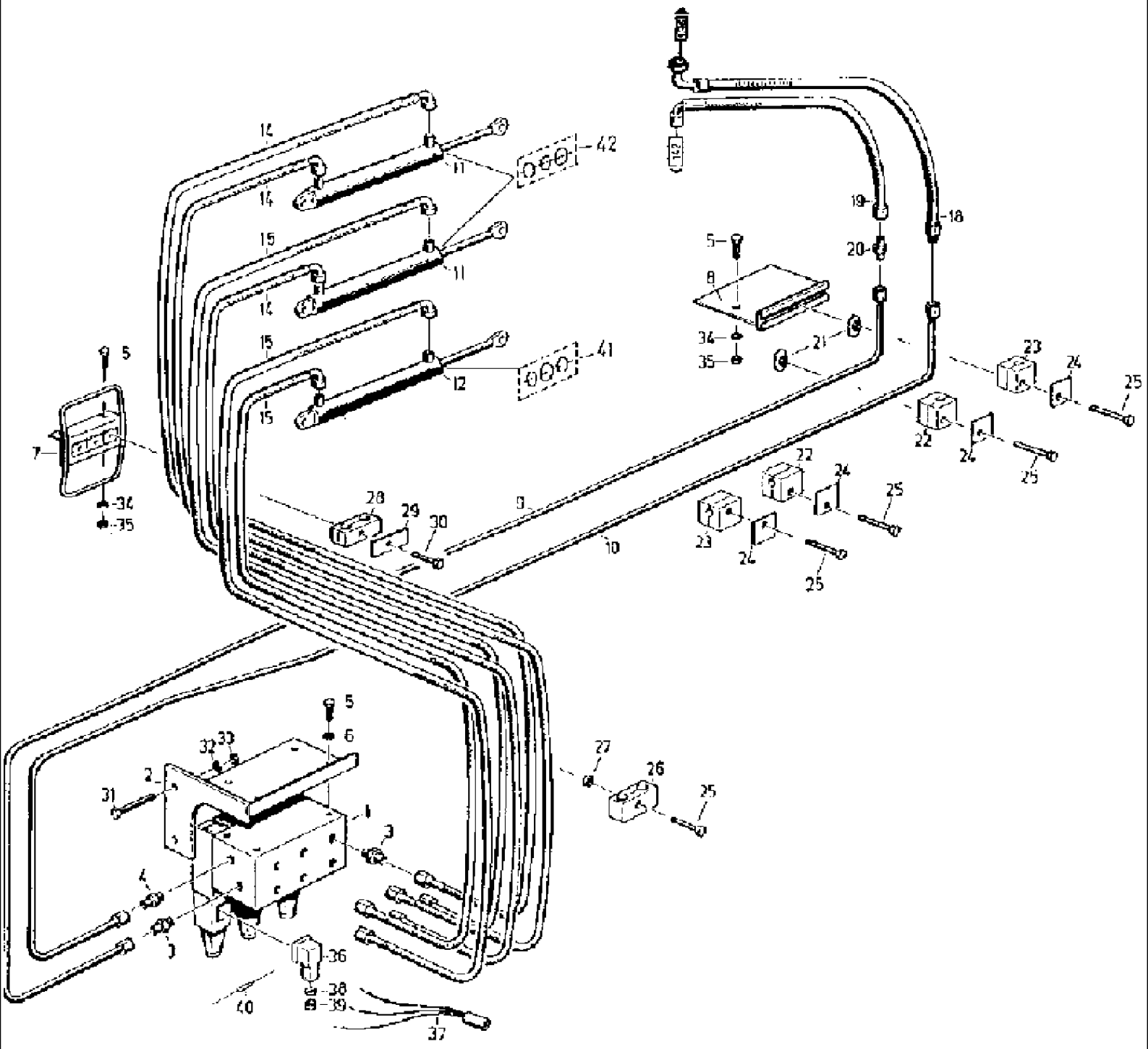
42
41
5
7
34
35
28
29
30
9
10
8
21
19
18
20
23
24
25
22
26
27
6
32
33
31
2
1
3
4
36
38
39
40
37

527 CASE IH COMBINE (1/98-12/98)

154 HYDRAULICS, CLUTCHES

Ref	Part Number	Qty	Description
1	061050018	1	VALVE BLOCK,
2	061010228	1	VALVE, support
3	003432730	7	ADAPTER, screwing, GE8-LR-ED/OMD
4	060504458	1	ADAPTER, screwing, GE12-L/R 1/4-ED/OMD
5	9933930001	5	SCREW, hex, M 8 x 20 -8.8
6	9961920061	2	WASHER, SPRING, B 8
7	061010316	1	GUIDE, hose
8	061010340	1	BLOCK, bracket 12
9	061010646	1	PIPE, D 3
10	061010654	1	TUBE ASSY., R 10
11	061010670	2	CYLINDER ASSY., 32/14 x 125
12	060100662	1	cylinder 40/25 x 160
14	003793753	3	HOSE, line, PHD 106 x 1600 AFLAFL 90
15	060504240	3	HOSE, line, PHD 106 x 1650 AFLAFL 45
18	060533237	1	HOSE, line, PHD 110 x 1000 HL AOL90
19	060506242	1	HOSE, line, PHD 110 x 450 AFLAFL
20	9969947128	1	UNION, XGR 12/8 -L
21	006646138	2	NUT, for T-slots SM
22	006646314	2	CIRCLIP, 108 PP
23	006646267	2	CIRCLIP, 112 PP
24	006646250	4	COVER, plate, DP 1
25	9933929450	7	SCREW, hex, M 6 x 30 -8.8
26	060505731	3	CLAMP, LNG 3 13,5/13,5 PP
27	006213734	3	NUT, hex, M 6 -8
28	006646170	3	CIRCLIP, 216/16 PPH
29	006646242	3	COVER, plate, GD 2 D
30	006341485	3	SCREW, hex, M 8 x 35 -8.8
31	9932932375	2	SCREW, hex, M 12 x 70 -8.8
32	006501557	2	WASHER, SPRING, B12
33	006214140	2	NUT, hex, M 12 -8
34	9999853117	3	PLATE, LOCKING, washer, VSF M 8
35	006213830	3	NUT, hex, M 8 -8
36	003781444	3	CONTACT, pin, Z4-GDM-2011-RE-grau-A
37	061021005	1	CABLE, clutch
38	9965962315	3	WASHER, A 5.3
39	9972876816	3	GROMMET, NOZZLE cable, A 4x1.5
40	9019973661	3	DIODE, SY 360/1
41	060534078	1	PACKAGE, SEALS, Set of gasket 40/25
42	060534086	2	PACKAGE, SEALS, Set of gasket 32/14

156 ELECTRICAL EQUIPMENT, FRONT

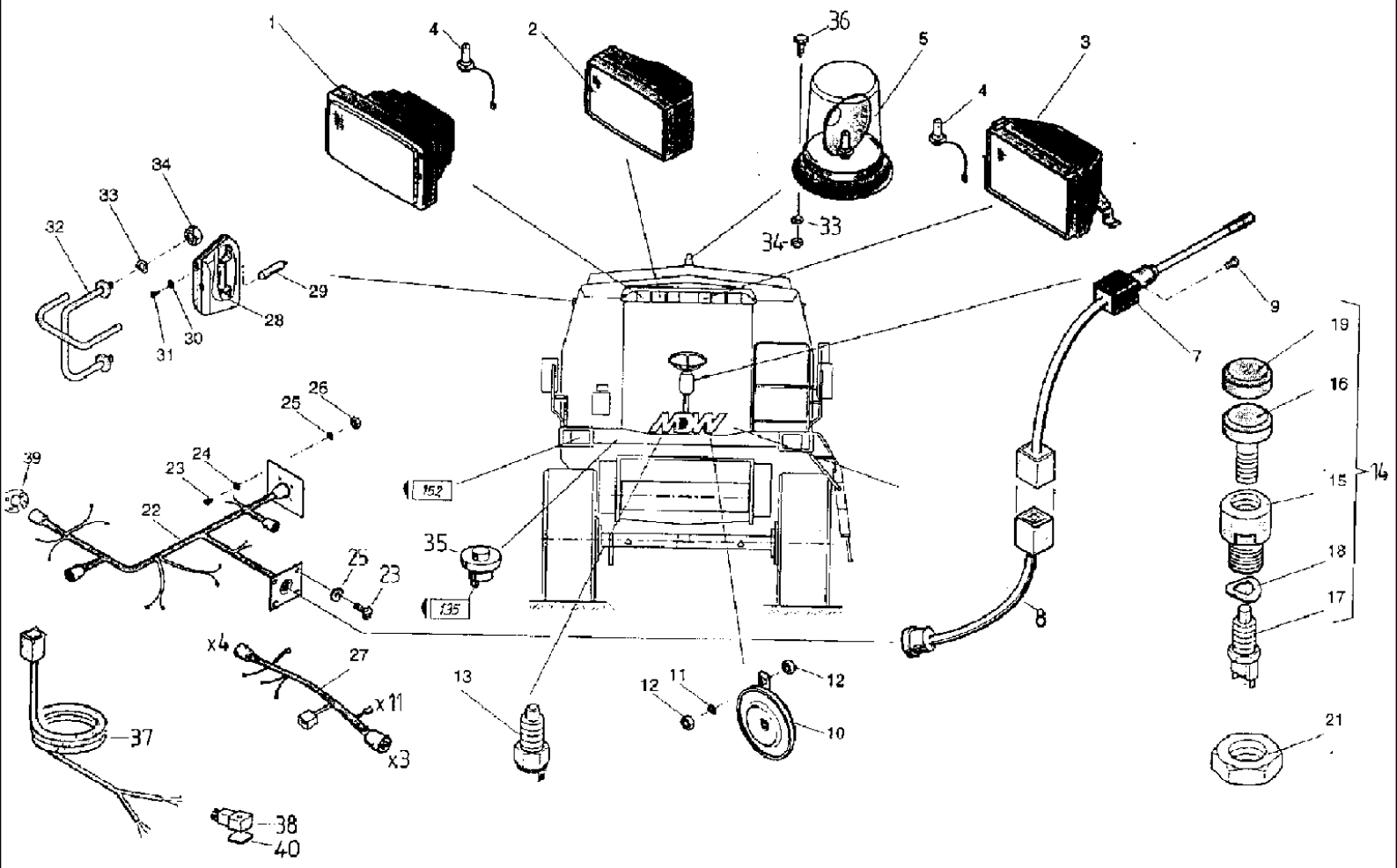

527 CASE IH COMBINE (1/98-12/98)

156 ELECTRICAL EQUIPMENT, FRONT

Ref	Part Number	Qty	Description
1	060507067	2	LIGHT, WORK, head
2	060502070	2	LIGHT, WORK, head
3	060505692	2	LIGHT, WORK, head
4	9019876492	9	LIGHT, halogen, 24V/H3
5	9019874281	1	LIGHT, rotary
7	060517735	1	SWITCH,
8	060517743	1	HARNESS, cable
9	060517751	4	SCREW, plate
10	9019972917	1	BUZZER,
11	9961920004	1	WASHER, SPRING, B 10
12	006213935	2	NUT, hex, M 10 -8
13	9019875258	1	SWITCH, BUTTON push
14	061021247	1	SWITCH, havarie
15	061021255	1	SUPPORT, adapter
16	060505828	1	ROD-TIP, PIECE pressure
17	060504835	1	SWITCH,
18	006501557	1	WASHER, SPRING, n.B., B 12
19	061025082	1	CAP,
21	060505844	1	NUT, hex, M 36 x 1.5
22	061033074	1	CABLE, ELECTRIC, tree
23	060520827	8	SCREW, hex, M 3 x 12 -5.8
24	9960919823	4	WASHER, A 3.2
25	9961966966	8	WASHER, SPRING, B 3
26	9950894093	4	NUT, hex, M 3
27	061033082	1	CABLE, ELECTRIC, tree
28	9019973403	2	LIGHT, parking
29	9019974420	2	BULB, incandescent, 24V/4W
30	9960962168	4	DISC, A 3.2
31	9937984092	4	SCREW, metal, ST 2.9 x 9.5
32	061024016	2	PROTECTOR,
33	9961919927	7	WASHER, SPRING, B 6
34	006213734	7	NUT, hex, M 6
35	060509204	1	SWITCH,
36	9932959721	3	SCREW, hex, M 6 x 30 -8.8
37	061033410	1	CABLE ASSY., 0287 bis 0306
38	060521137	1	SOCKET, POWER, plug, 0287 bis 0306
39	060201380	1	PLATE, LARGE, ring
40	060529722	1	GASKET,

157 LAMP UNIT

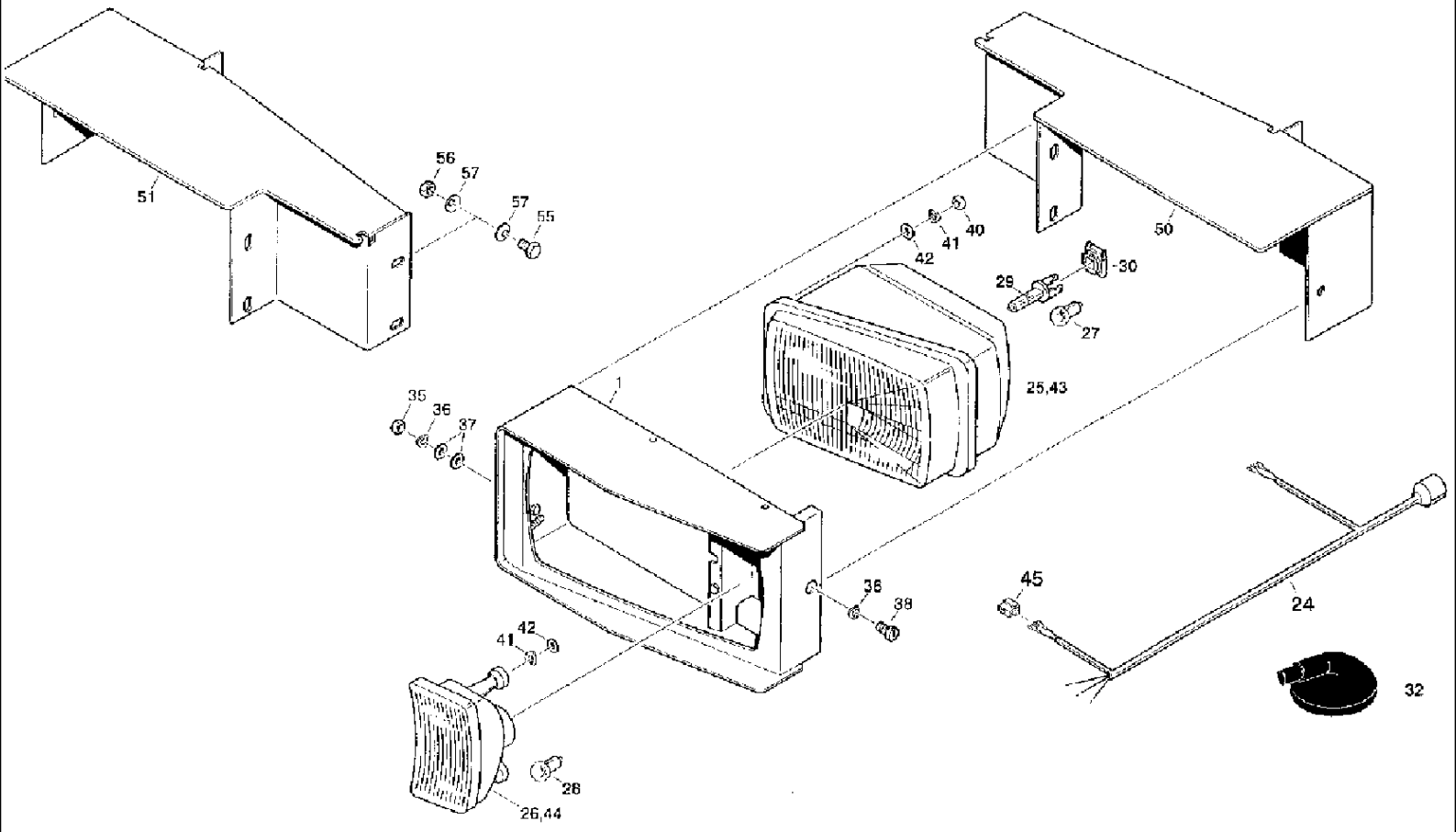

527 CASE IH COMBINE (1/98-12/98)

157 LAMP UNIT

Ref	Part Number	Qty	Description
1	061011985	2	CASE ASSY., box
24	061022481	2	CABLE, ELECTRIC,
25	060505803	1	HEADLIGHT, g
26	060505811	1	LIGHT, INDICATER, FLASHER lateral, g
27	9019974420	2	BULB, T 4 W 24V/4W BA 9s
28	9019974357	2	BULB, P 21 W 24V/21W BA 15s
29	9019974478	2	LIGHT, H4 24V-75/70W
30	060503047	2	CONNECTOR, piece
32	060505707	2	CABLE, ELECTRIC, grommet
35	006213830	4	NUT, hex, M 8 -8
36	9961920061	8	WASHER, SPRING, B 8
37	9960921633	8	WASHER, A 8.4
38	9937938544	2	SCREW, cheese-head, M 8 x 20 -5.8
40	006213734	12	NUT, hex, M 6 -8
41	9961919927	12	WASHER, SPRING, B 8
42	006510228	8	WASHER, B 6.4
43	060505780	1	HEADLIGHT, f
44	060505797	1	LIGHT, INDICATER, FLASHER lateral, f
45	060509003	2	BOX, TERMINAL, housing
50	061054046	1	SHEET, PIECE intermediate, f
51	061054087	1	SHEET, PIECE intermediate, g
55	9933929065	6	SCREW, hex, M 10 x 20 -8.8
56	006213935	6	NUT, hex, M 10 -8
57	9999853166	12	PLATE, LOCKING, washer, VSF B 10

158 ELECTRICAL EQUIPMENT, LEFT SIDE I

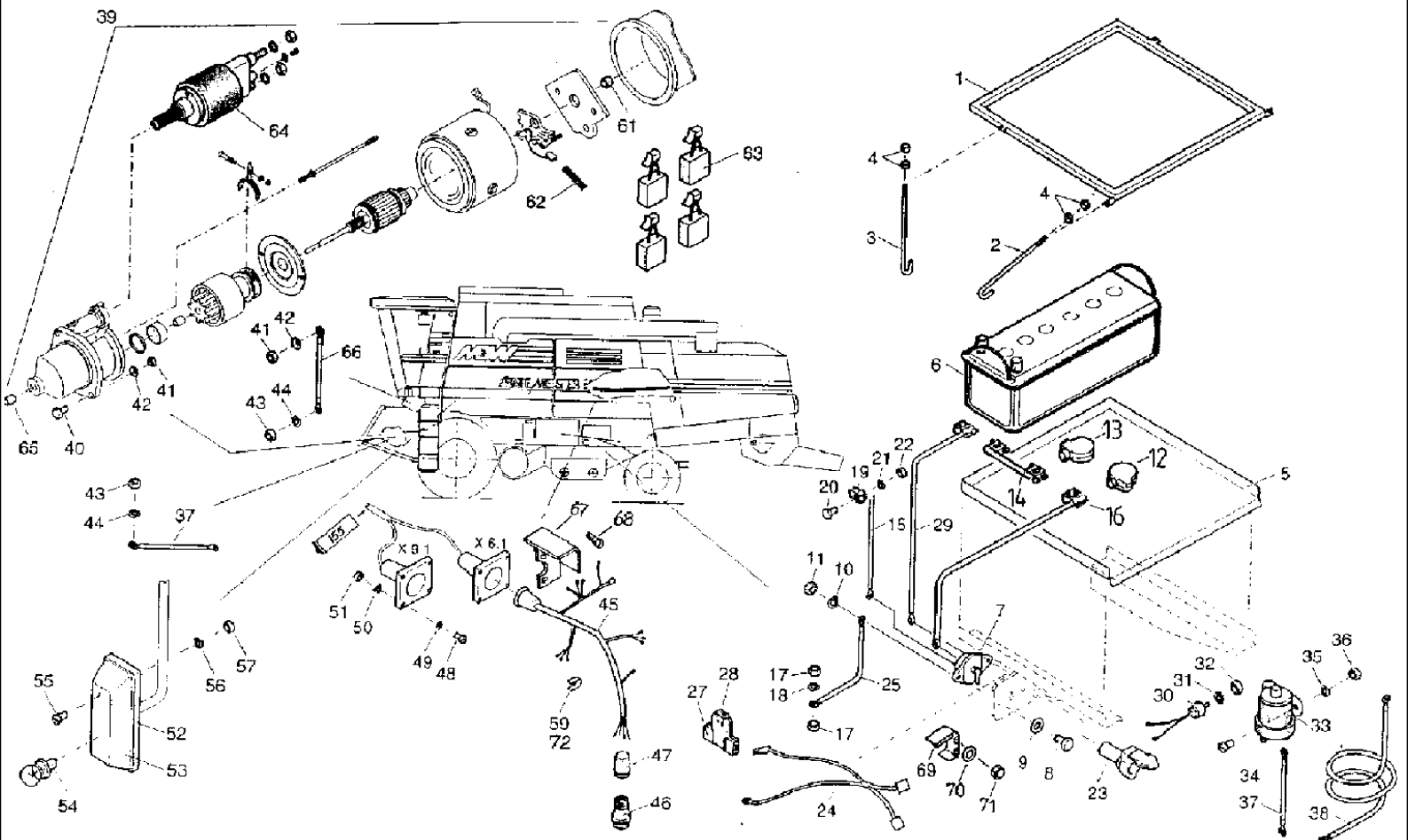

527 CASE IH COMBINE (1/98-12/98)

158 ELECTRICAL EQUIPMENT, LEFT SIDE I

Ref	Part Number	Qty	Description
1	061009990	1	FRAME,
2	4247058897	2	ROD, tie
3	4247058903	2	ROD, tie
4	006213830	8	NUT, hex, M 8 -8
5	4247058911	1	BOTTOM,
6	4254137743	2	BATTERY, DRY,
7	060519472	1	BATTERY CUT-OUT, main switch
8	9933929173	2	SCREW, hex, M 8 x 25 -8.8
9	9960921633	2	WASHER, A 8.4
10	9961920061	2	WASHER, SPRING, SPARING plate, B 8
11	006213830	2	NUT, hex, M 8 -8
12	4247058936	3	PROTECTOR, pole, g
13	4247058928	1	PROTECTOR, pole, f
14	060512771	1	LINE, (+/-) lead
15	9922875301	1	SHIN, LINE connecting
16	060519712	1	LINE, (-)
17	006213935	2	NUT, hex, M 10 -8
18	9961920004	1	WASHER, SPRING, SPARING plate, B 10
19	060160627	3	CLAMP, pipe
20	006338385	3	SCREW, hex, M 6 x 16 -8.8
21	9961919927	3	WASHER, SPRING, SPARING plate, B 6
22	006213734	3	NUT, hex, M 6 -8
23	9019877967	1	SOCKET, plug
24	061028220	1	CABLE ASSY.,
25	060508156	1	CABLE, (-) connecting
27	060505715	1	PROTECTOR, holder
28	060502101	1	FUSE, 4 A
29	060516010	1	CABLE, (+) lead
30	4260716223	1	DIODE,
31	006506264	1	DISC, NOTCHED, LOCK toothed, A 8.2
32	006213830	1	NUT, hex, M 8 -8
33	9019059245	1	RELAY, 24 V
34	006003493	2	SCREW, cheese-head, M 5 x 12 -5.8
35	9961919902	2	WASHER, SPRING, SPARING plate, B 5
36	006213478	2	NUT, hex, M 5 -8
37	4260705085	2	CABLE ASSY.,
38	061010043	1	HARNESS, cable
39	9019059237	1	MOTOR, STARTER, 24 V
40	9933931863	2	SCREW, hex, M12 x 25 -8.8
41	006214140	3	NUT, hex, M 12 -8
42	9999853174	3	PLATE, LOCKING, washer, VSF B 12
43	006213830	2	NUT, hex, M 8 -8
44	9961920061	2	WASHER, SPRING, SPARING plate, B 8
45	061051590	1	CABLE, tree
46	060508541	1	CONNECTOR, plug

158 ELECTRICAL EQUIPMENT, LEFT SIDE I

Ref	Part Number	Qty	Description
47	060508558	1	EYE, LIFTING, grommet
48	060520827	6	SCREW, hex, M 3 x 12 -5.8
49	9960919823	8	WASHER, A 3.2
50	9961966966	10	WASHER, SPRING, SPARING plate, B 3
51	9950894093	10	NUT, hex, M 3 -5.8
52	060505860	1	LIGHT, INDICATER, direction, f
53	060505885	1	DISC, PANE light, f
54	9019974357	1	BULB,
55	9936938600	2	SCREW, cheese-head, M 4 x 10 -5.8
56	9961919896	2	WASHER, SPRING, SPARING plate, B 4
57	9950897875	2	NUT, hex, M 4 -5.8
59	9923925641		CIRCLIP, n.B.
61	060502712	1	BUSHING, LARGE,
62	060502704	4	SPRING, COMPRESSION,
63	060502720	1	SET, BRUSHES, carbon
64	060502737	1	RELAY,
65	060502698	1	BUSHING, LARGE,
66	060509253	1	CABLE ASSY., mass
67	061038222	1	PROTECTOR,
68	060520835	2	SCREW, hex, M 3 x 20 -5.8
69	061037736	1	FENDER ASSY., mudguard
70	9961919902	3	WASHER, SPRING, SPARING plate, B 5
71	006213478	3	NUT, hex, M 5 -5.8
72	006708538	1	CLAMP,

160 ELECTRICAL EQUIPMENT, LEFT SIDE II

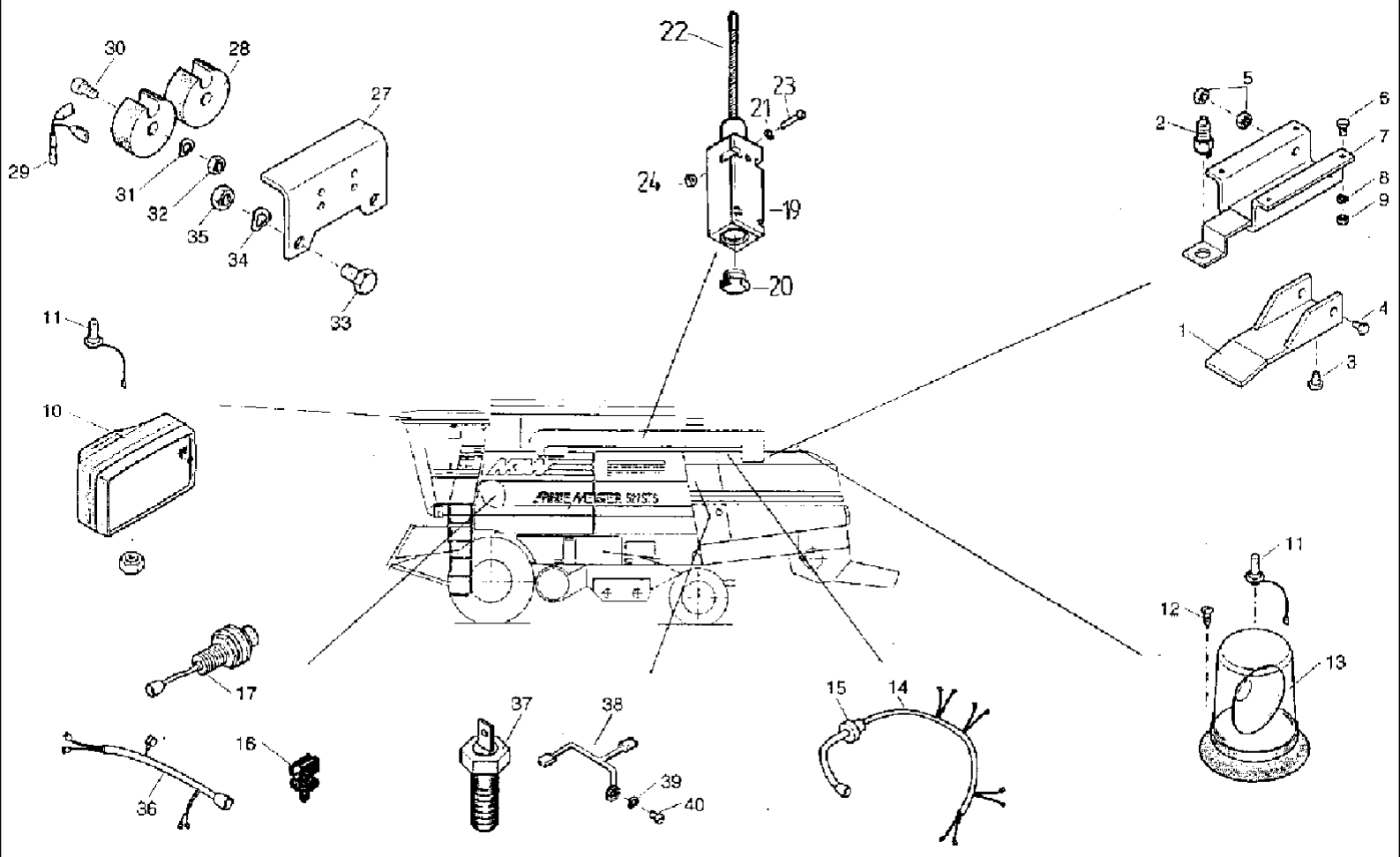

527 CASE IH COMBINE (1/98-12/98)

160 ELECTRICAL EQUIPMENT, LEFT SIDE II

Ref	Part Number	Qty	Description
1	4260695450	1	SHEET, Lever for push button
2	9019875258	1	SWITCH, push
3	9972876816	1	GROMMET, NOZZLE cable, A 4 x 1.5
4	9932977940	1	SCREW, hex, M 6 x 90 -8.8
5	006213734	2	NUT, hex, M 6 -8
6	006338385	4	SCREW, hex, M 6 x 16 -8.8
7	4260695442	1	RETAINER, bracket
8	9961919927	4	WASHER, SPRING, B 6
9	006213734	4	NUT, hex, M 6 -8
10	060502070	1	LIGHT, WORK, head
11	9019876492	2	LIGHT, halogen, W/24V-H3
12	9937984107	3	SCREW, metal, 6.3 x 22
13	9019874281	1	LIGHT, rotary
14	061028212	1	CABLE, ELECTRIC, tree
15	060505354	1	GROMMET, cable
16	060509325	11	CLIP, plastic
17	060508590	2	SWITCH, initiator
19	060519038	1	SENSOR, switch
20	060519054	1	SCREW,
21	9961919896	2	WASHER, SPRING, B 4
22	060519046	1	LEVER,
23	9936938955	2	SCREW, cheese-head, M 4 x 25 -5.8
24	9950895496	2	NUT, hex, M 4 -8
27	061025435	1	ANGLE,
28	060505957	1	RESISTOR, combination
29	061025443	1	CABLE,
30	9936938713	2	SCREW, cheese-head, M 5 x 20 -5.8
31	9961919902	2	WASHER, SPRING, B 5
32	006213478	2	NUT, hex, M 5 -8
33	006344037	2	SCREW, hex, M 10 x 25 -8.8
34	9961920004	2	WASHER, SPRING, B 10
35	006213935	2	NUT, hex, M 10 -8
36	061052124	1	HARNESS, cable
37	060508277	1	CONTACT, CONTROL temperature
38	060183561	1	LINE, ejector
39	9961919902	1	WASHER, SPRING, B 5
40	9936939538	1	SCREW, cylinder, M 5 x 6 -5.8

161 ELECTRICAL EQUIPMENT, RIGHT SIDE

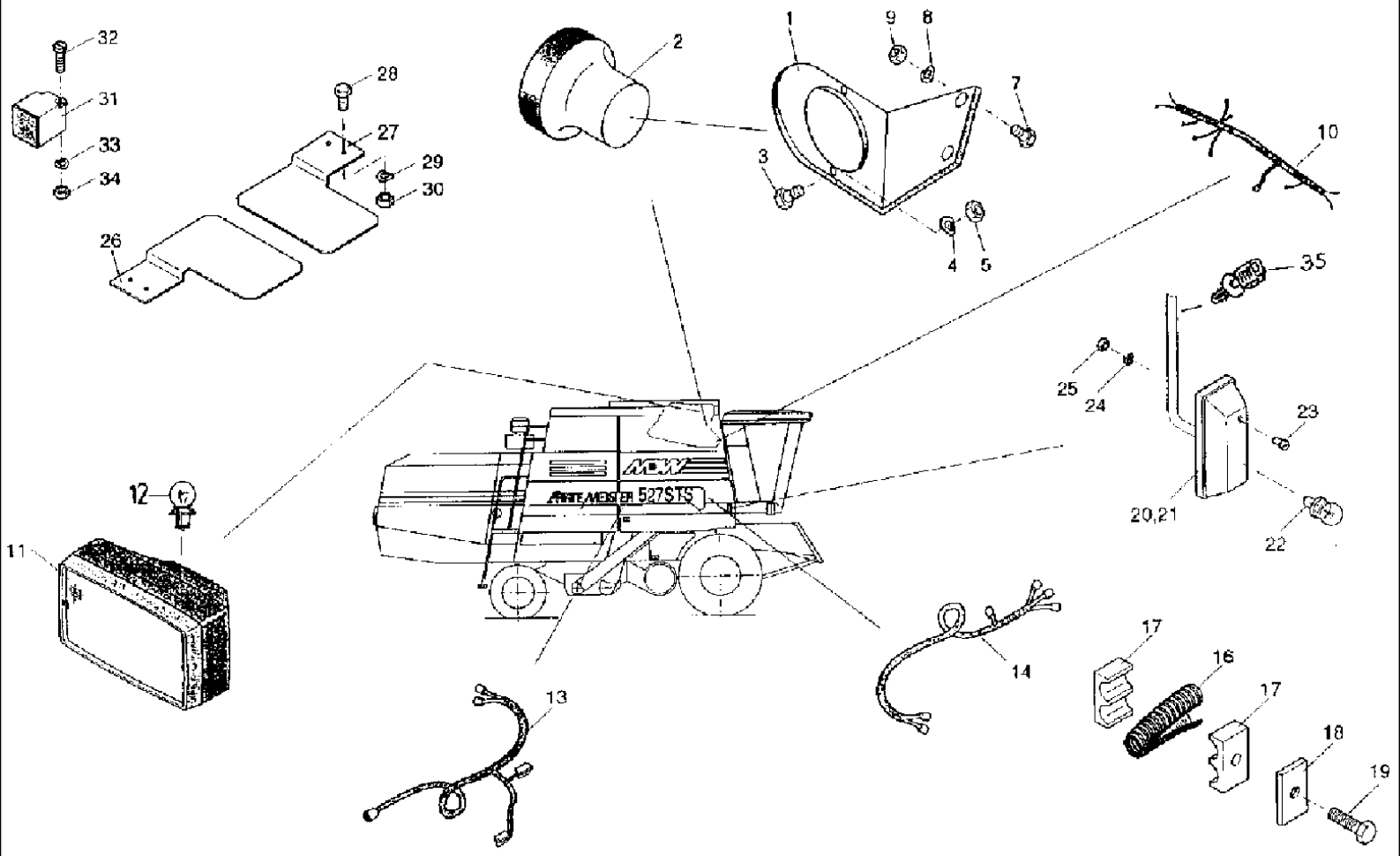

527 CASE IH COMBINE (1/98-12/98)

161 ELECTRICAL EQUIPMENT, RIGHT SIDE

Ref	Part Number	Qty	Description
1	4254125305	2	ANCHOR, fastening
2	4254125290	2	GAUGE, FUEL,
3	9930977163	4	SCREW, hex, M 6 x 20 -8.8
4	9961919927	4	WASHER, SPRING, Plate sparing, B 6
5	006213734	4	NUT, hex, M 6 -8
7	006340781	4	SCREW, hex, M 8 x 16 -8.8
8	9961920061	4	WASHER, SPRING, Plate sparing, B 8
9	006213830	4	NUT, hex, M 8 -8
10	061027742	1	CABLE, TANK grain
11	061010051	2	HEADLIGHT, reverse
12	9019974357	2	BULB, incandescent, 24V/21W
13	061028181	1	HARNESS, TREE cable, g
14	061068734	1	HARNESS, TREE cable
16	061011518	1	TUBE, guard
17	006646066	4	CIRCLIP,
18	003781918	4	COVER, plate
19	006334180	4	SCREW, hex, M 8 x 50 -8.8
20	060505852	1	LIGHT, INDICATER, direction, g
21	060505877	1	DISC, glass, g
22	9019974357	2	BULB, incandescent, 24V/21W
23	9936938600	2	SCREW, cheese-head, M 4 x 10 -5.8
24	9961919896	2	WASHER, SPRING, Plate sparing, B 4
25	9950897875	2	NUT, hex, M 4 -8
26	061028165	1	SHEET, TANK grain, f
27	061028157	1	SHEET, TANK grain, g
28	9933929651	4	SCREW, hex, M 6x14 -8.8
29	9999853100	4	PLATE, LOCKING, washer, M6
30	006213734	4	NUT, hex, M 6 -8
31	060508646	2	SWITCH, initiator
32	9936937913	4	SCREW, cheese-head, M 5 x 45 -5.8
33	9961919902	4	WASHER, SPRING, B5
34	9950895543	4	NUT, hex, M 5 -5
35	060509325	3	CLIP, plastic

162 ELECTRICAL EQUIPMENT, REAR

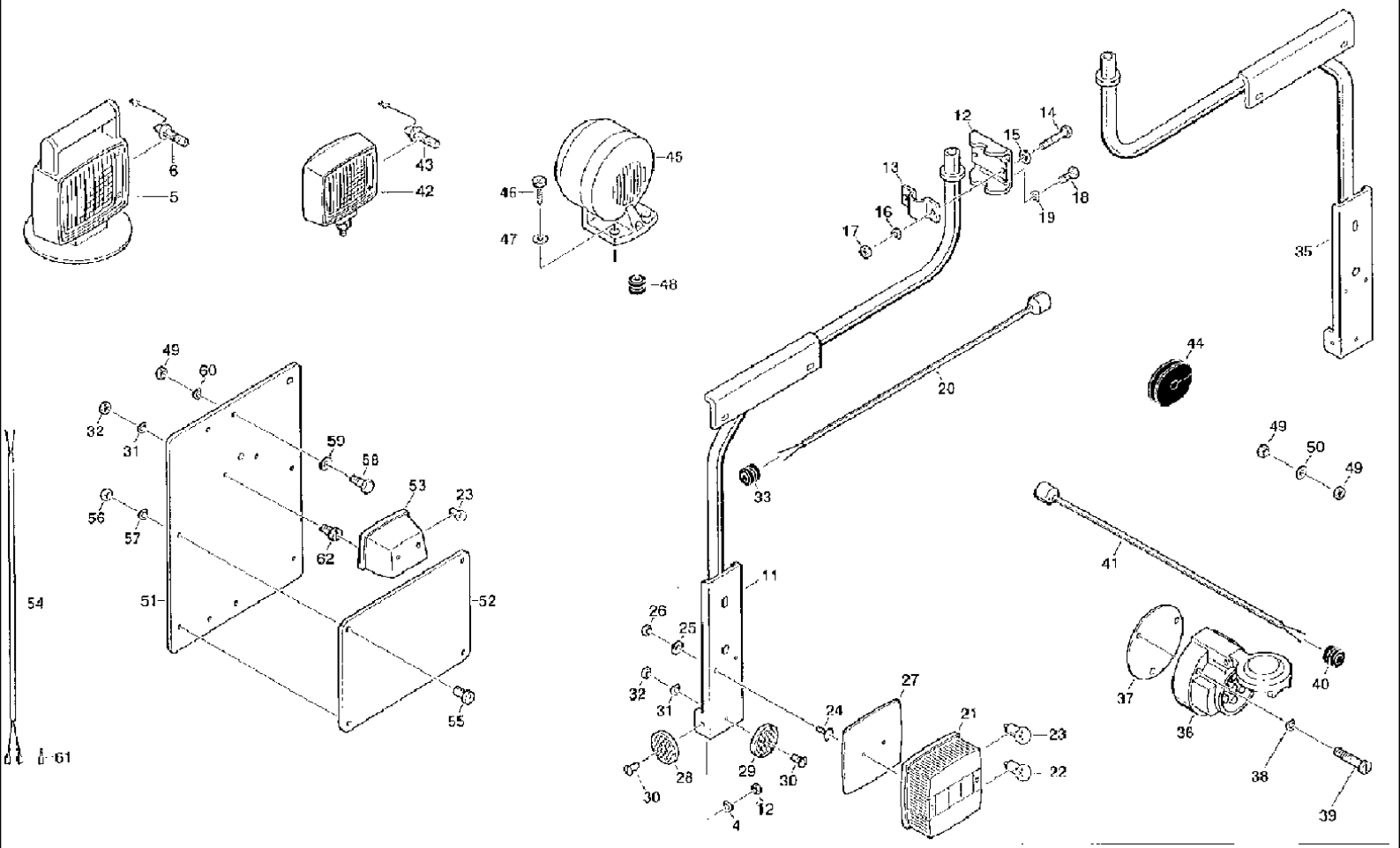

527 CASE IH COMBINE (1/98-12/98)

162 ELECTRICAL EQUIPMENT, REAR

Ref	Part Number	Qty	Description
5	060509173	1	LIGHT, WORK, hand
6	9019876492	1	LIGHT, halogen, H3, 24V/70W
11	061051404	1	SUPPORT, lamp, f
12	060182825	2	RETAINER,
13	060061817	2	BOW,
14	006341397	4	SCREW, hex, M 8 x 30 -8.8
15	9960921633	2	WASHER, 8.4
16	9961920061	2	WASHER, SPRING, B 8
17	006213830	2	NUT, hex, M 8 -8
18	9933929748	4	SCREW, hex, M 8 x 10 -8.8
19	9961920061	2	WASHER, SPRING, B 8
20	061021423	2	HARNESS, cable
21	060509864	2	LIGHT, TAIL, combined
22	9019974357	4	BULB, B 24 V/21 W Ba 15 s
23	060500647	2	BULB, B 24 V/10 W Ba 15 s
24	9938928076	2	SCREW, fillister-head, M 6 x 20 -5.8
25	006510927	2	WASHER, 6.4
26	006267111	4	NUT, hex, M 6 -8
27	060169434	2	PAD, RUBBER, plate
28	9019973331	2	REFLECTOR, rear
29	003790500	2	REFLECTOR, rear
30	9941934503	4	SCREW, countersunk, M 5 x 16
31	9961919902	8	WASHER, SPRING, B 5
32	006213478	8	NUT, hex, M 5 -8
33	9972876898	2	GROMMET, NOZZLE cable
35	061051437	1	SUPPORT, lamp
36	007067048	1	SOCKET/RECEPTACLE, plug
37	4140751514	1	PLUG, UNDERLAY socket
38	9961919902	3	WASHER, SPRING, B 5
39	9936938754	3	SCREW, cylinder, M 5 x 30
40	9972877013	1	GROMMET, NOZZLE cable
41	061021431	1	CABLE,
42	060502070	1	LIGHT, WORK, head
43	9019876492	1	LIGHT, halogen, H3 24V/70W
44	061027236	2	GROMMET, locking
45	060508726	1	HORN,
46	9937939135	2	SCREW, plate
47	9960921457	2	WASHER, 4.3
48	9972876816	1	GROMMET, cable
49	006213734	2	NUT, hex, M 6-8
50	9961919927	1	WASHER, SPRING, B 6
51	061052815	1	PLATE,
52	020948185	1	ADHESIVE, plate
53	060516670	1	LAMP, number-plate
54	061052807	1	CABLE ASSY.,

162 ELECTRICAL EQUIPMENT, REAR

Ref	Part Number	Qty	Description
55	006001885	4	SCREW, M4 x 12
56	9950895496	4	NUT, hex, M4 -8
57	9961919896	4	WASHER, SPRING, B 4
58	006338385	2	SCREW, hex, M 6 x 16
59	9964963985	2	WASHER, A 6.4
60	9961919927	2	WASHER, SPRING, B 6
61	9019875957	2	CONNECTION, BUSHING flat pin
62	006003493	2	SCREW, M 5 x 12

164 ELECTRICAL EQUIPMENT, CONTROL CONSOLE I

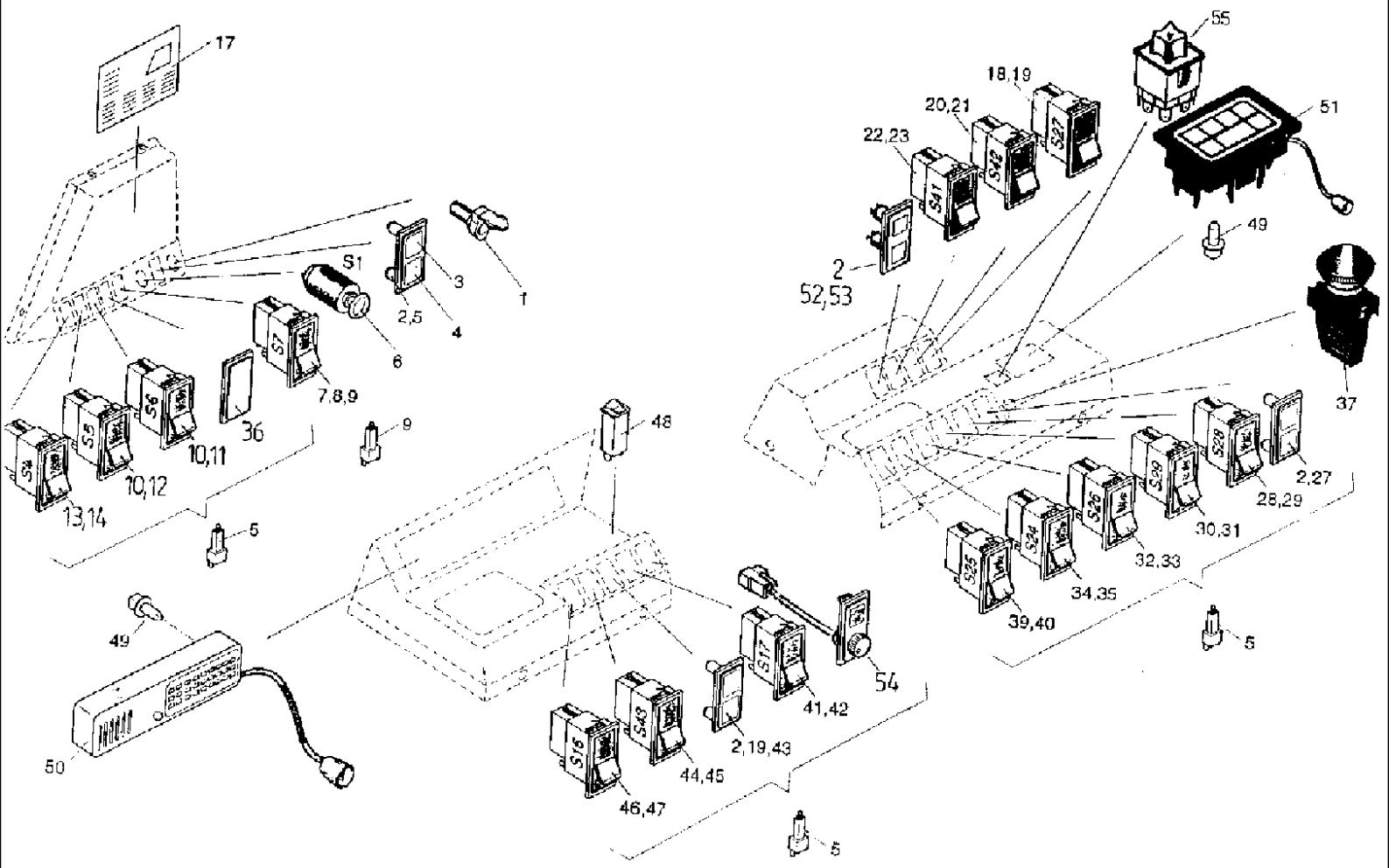

527 CASE IH COMBINE (1/98-12/98)

164 ELECTRICAL EQUIPMENT, CONTROL CONSOLE I

Ref	Part Number	Qty	Description
1	003790541	1	SOCKET, plug
2	060157816	4	BULB, tell-tale
3	060157832	1	INSERT, switch, ge
4	060157840	1	INSERT, switch, gn
5	9019059903		BULB, n.B.
6	9019636002	1	PUSH BUTTON, heater-starter
7	060157711	1	SWITCH, toggle
8	060157824	1	SWITCH, insert
9	9019059897		BULB, n.B.
10	060157777	2	SWITCH, toggle
11	060504980	1	SYMBOLS, switch insert
12	060160354	1	HOLDER, switch insert
13	060157744	1	SWITCH, toggle
14	060160338	1	SYMBOLS, switch insert
17	061033105	1	DECAL,
18	060512714	1	SWITCH, toggle
19	060157881	2	HOLDER, switch insert
20	060157744	1	SWITCH, toggle
21	060502384	1	HOLDER, switch insert
22	060157744	1	SWITCH, toggle
23	060160401	1	HOLDER, switch insert
27	061021288	1	SYMBOLS, switch insert
28	060157728	1	SWITCH, toggle
29	061010398	1	SYMBOLS, switch insert
30	060157728	1	SWITCH, toggle
31	060506250	1	CLUSTER, INSTRUMENT, switch insert
32	060157703	1	SWITCH, toggle
33	060160313	1	CONNECTION, ELECTRIC, switch insert
34	060157736	1	SWITCH, toggle
35	060160305	1	SYMBOLS, switch insert
36	003793368	1	SHROUD,
37	060508461	1	SWITCH,
39	060157785	1	SWITCH, toggle
40	060160346	1	SYMBOLS, switch insert
41	060157728	1	SWITCH, toggle
42	060157865	1	HOLDER, switch insert
43	060157873	1	SYMBOLS, switch insert
44	060160442	1	SWITCH, toggle
45	060502376	1	HOLDER, switch insert
46	060157703	1	SWITCH, toggle
47	060157857	1	HOLDER, switch insert
48	9999849998	1	AUTOM. CIRCUITBREAKER, RELEASE overload
49	060507565		BULB, n.B.
50	060533487	1	INDICATOR,
51	060508453	1	INDICATOR, insert

164 ELECTRICAL EQUIPMENT, CONTROL CONSOLE I

Ref	Part Number	Qty	Description
52	060512691	1	SWITCH, insert
53	061033090	1	SYMBOLS,
54	060512843	1	POTENTIOMETER,
55	060508486	1	SWITCH,

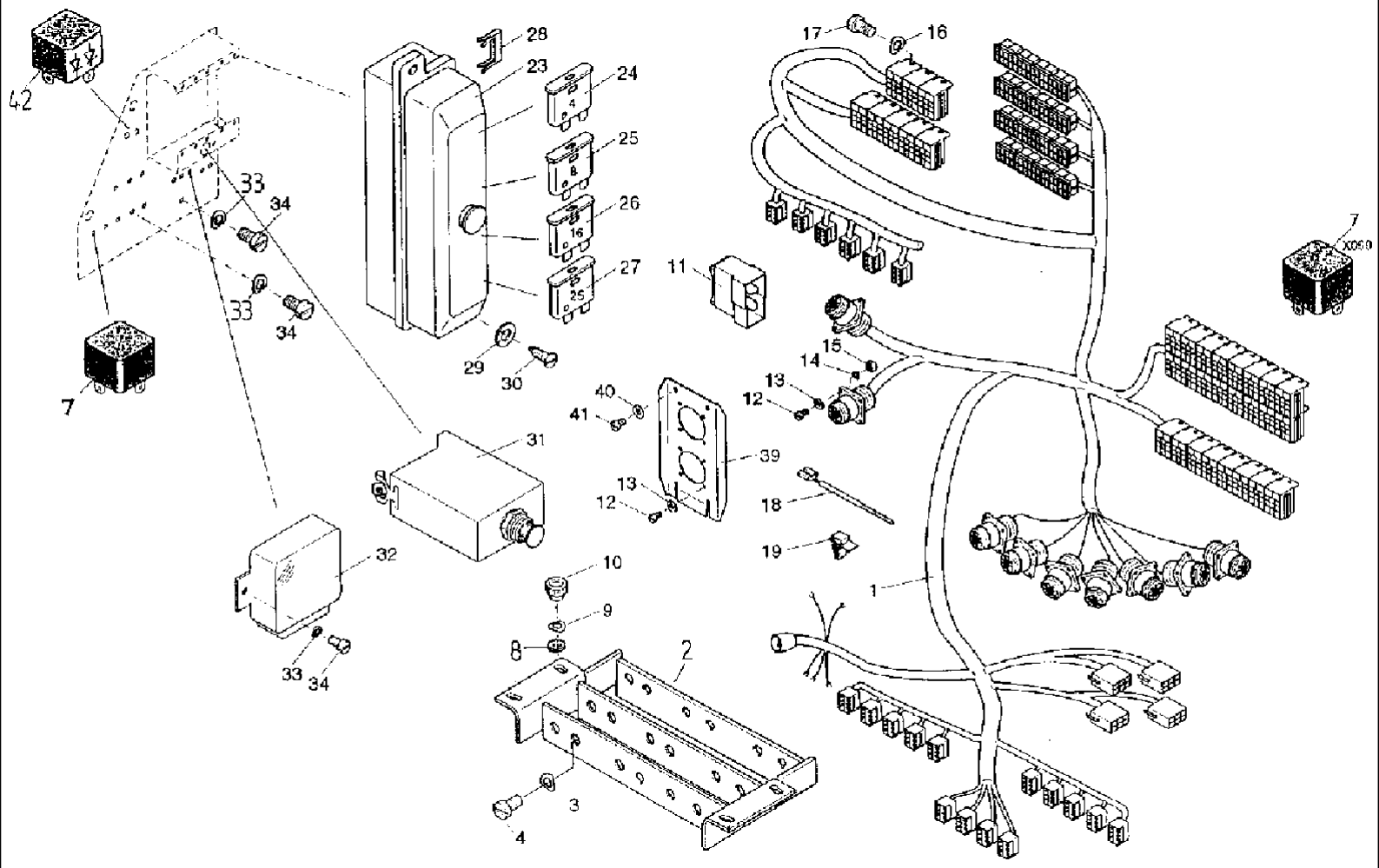
42
28
23
24
25
26
27
33
34
33
34
29
30
7
31
32
33
34
40
41
39
13
12
10
9
8
2
3
4
17
16
11
15
14
13
12
18
19
1
7
X060

527 CASE IH COMBINE (1/98-12/98)

166 EL. EQUIPMENT, CONTROL CONSOLE II

Ref	Part Number	Qty	Description
1	061068701	1	HARNESS, CABLE main
2	061032844	1	RELAY, support
3	9961919902	8	WASHER, SPRING, B 5
4	9936939538	8	SCREW, cheese-head, M 5 x 6 -5.8
7	060503272	40	RELAY,
8	9965962315	4	WASHER, A 5.3
9	9961919902	4	WASHER, SPRING, B 5
10	9951895534	4	NUT, knurled, M 5 -5
11	4260712992	1	DIODE, plug
12	060520827	8	SCREW, hex, M 3 x 12 -5.8
13	9960919823	8	WASHER, A 3.2
14	9961966966	8	WASHER, SPRING, B 3
15	9950894093	8	NUT, hex, M 3-8
16	9961919902	4	WASHER, SPRING, B 5
17	9936939538	4	SCREW, cheese-head, M 5 x 6 -5.8
18	060152467	4	CABLE, connection
19	060172093	5	CLAMP,
23	060502087	5	FUSE BOX, BOX fuse
24	060502101	15	FUSE, 4 A
25	060502118	10	FUSE, 8 A
26	060502126	11	FUSE, 16 A
27	060502134	4	FUSE, 25 A
28	060502095	25	BRIDGE,
29	9960921457	10	WASHER, A 4.3
30	9937939135	10	SCREW, metal, ST 3.5 x 9.5
31	060505893	1	SWITCH, guard, 50 A
32	9019974035	1	UNIT, FLASHER,
33	9961919902	10	WASHER, SPRING, B 5
34	9936939538	10	SCREW, cheese-head, M 5 x 6 -5.8
39	061028245	1	PLATE, plug
40	9961919902	2	WASHER, SPRING, B 5
41	9936939538	2	SCREW, cheese-head, M 5 x 6 -5.8
42	060512706	2	DIODE, combination

167 EL. EQUIPMENT, CONTROL CONSOLE III

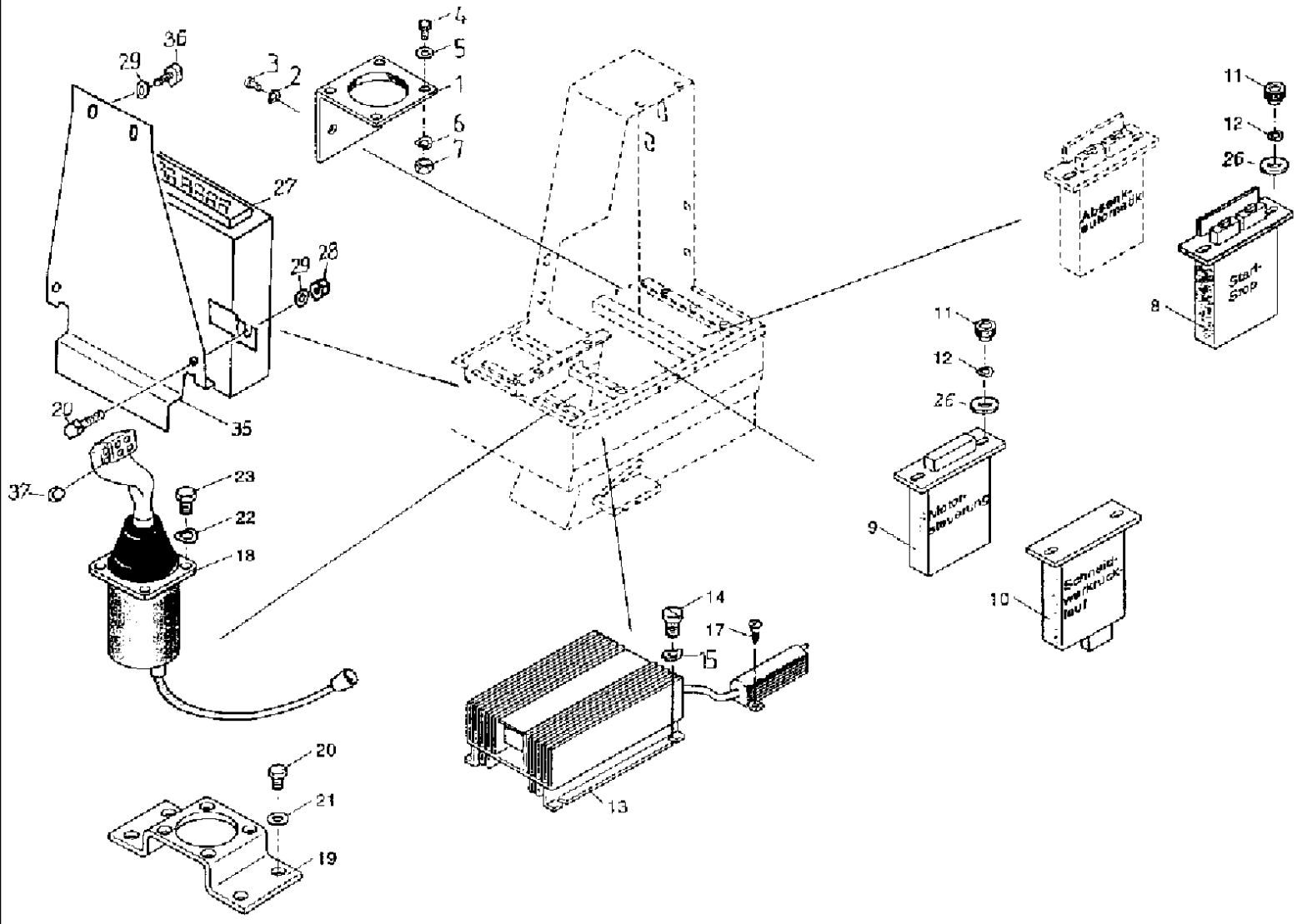

527 CASE IH COMBINE (1/98-12/98)

167 EL. EQUIPMENT, CONTROL CONSOLE III

Ref	Part Number	Qty	Description
1	061023948	1	BRACKET, holder, X1
2	9961919902	2	WASHER, SPRING, B 5
3	006335606	2	SCREW, cheese-head, M 5 x 10 -5.8
4	060520827	4	SCREW, hex, M 3 x 12 -5.8
5	9960919823	4	WASHER, A 3
6	9961966966	4	WASHER, SPRING, B 3
7	9950894093	4	NUT, hex, M 3 -8
8	060509382	1	AUTOM. CIRCUITBREAKER, KBG
9	060505916	1	CONTROL, KBG
10	060512747	1	PIPE, RETURN, KBG
11	9951895534	6	NUT, knurled, M 5 -5
12	9961919902	6	WASHER, SPRING, B 5
13	060503071	1	TRANSFORMER,
14	006001305	4	SCREW, cheese-head, M 5 x 8 -5.8
15	9961919902	4	WASHER, SPRING, B 5
17	060509341	2	SCREW, metal, 2.9 x 9.5
18	061028286	1	JOYSTICK, accelerator S
19	061011768	1	BOW,
20	9933928980	6	SCREW, hex, M 5 x 12 -8.8
21	060505321	4	PLATE, LOCKING, VSF M 5
22	9961919927	4	WASHER, SPRING, B 6
23	9933929651	4	SCREW, hex, M 6 x 14 -8.8
26	9965962315	6	WASHER, A 5.3
27	061031378	1	AMPLIFIER, proportional
28	006213478	2	NUT, hex, M 5 -8
29	9961919902	2	WASHER, SPRING, B 5
35	061037703	1	HOLDER, intake
36	006335606	2	SCREW, hex, M 5 x 10 -8.8
37	060531307		FAIRING, LIGHT, CAP rubber, n.B.

168 AUTOMATIC LOWERING DEVICE

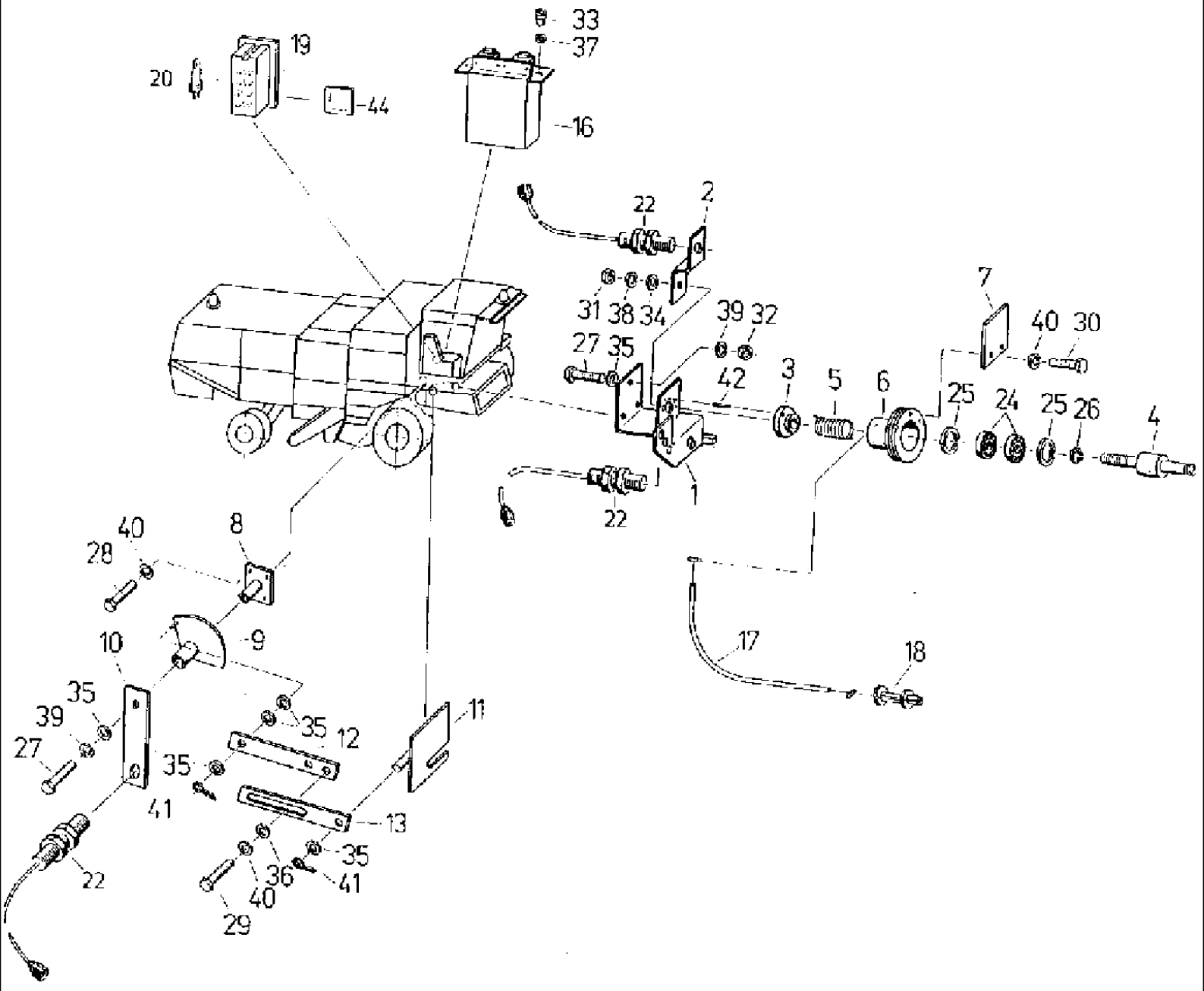

527 CASE IH COMBINE (1/98-12/98)

168 AUTOMATIC LOWERING DEVICE

Ref	Part Number	Qty	Description
1	060212078	1	RETAINER,
2	4260701313	1	RETAINER,
3	4260701321	1	RING,
4	4260701338	1	PIN, LARGE, bolt
5	4260701346	1	SPRING,
6	4260701354	1	ROPE PULLEY, sheave
7	4260701362	1	SHEET, plate
8	4260701370	1	SUPPORT, BASE bearing
9	4260701387	1	WASHER, WAFER switch
10	4260701395	1	SHIN, strap
11	4260701258	1	JOURNAL,
12	4260701266	1	CONTACT, piece 1
13	4260701274	1	CONTACT, piece 2
16	4260703821	1	CONTROL, LOWERING automatic
17	060195540	1	ROPE, METAL, control, 1884 x 1550 x 316
18	060524027	2	SET SCREW, adjusting, B-M 6x34
19	060157736	1	SWITCH, toggle
20	9019059897		BULB, n.B.
22	060508590	3	SWITCH, initiator, Bi 5U-EM18-AM4X/S301
24	9902892845	2	BEARING, ball, 6000 RS
25	9964917682	2	CIRCLIP, 26 x 1.2
26	9964917110	1	CIRCLIP, 10 x 1
27	9933930001	4	SCREW, hex, M 8 x 20 -8.8
28	006338385	3	SCREW, hex, M 6 x 16 -8.8
29	9933929161	2	SCREW, hex, M 6 x 10 -8.8
30	9933929200	2	SCREW, hex, M 6 x 12 -8.8
31	006213935	1	NUT, hex, M 10 -8
32	006214776	3	NUT, hex, M 8 - 10
33	9951895534	2	NUT, knurled, M 5 -5
34	9960921787	1	WASHER, A 10.5
35	9960921633	8	WASHER, A 8.4
36	006510927	2	WASHER, A 6.4
37	9965962315	2	WASHER, A 5.3
38	9961911085	1	WASHER, LOCK, spring, B 10
39	9961910976	4	SPRING, WASHER lock, B 8
40	006455742	7	WASHER, LOCK, spring, B 6
41	9963949424	2	PIN, SPLIT (COTTER), 2 x 16
42	9967942430	1	PIN, grooved, 4 x 12
44	060160305	1	SYMBOLS, switch insert

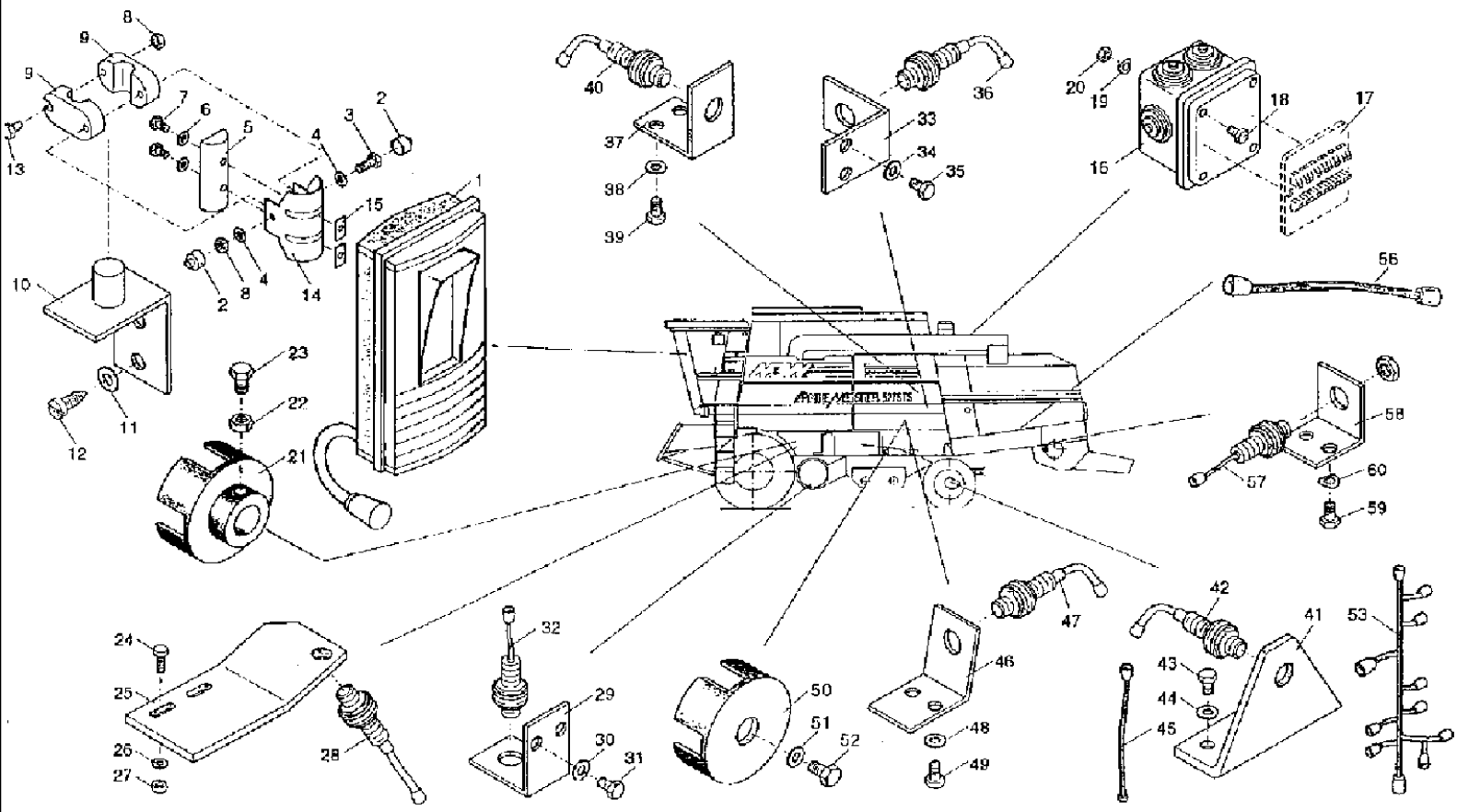
1
2
3
4
5
6
7
8
9
10
11
12
13
14
15
16
17
18
19
20
21
22
23
24
25
26
27
28
29
30
31
32
33
34
35
36
37
38
39
40
41
42
43
44
45
46
47
48
49
50
51
52
53
54
55
56
57
58
59
60

527 CASE IH COMBINE (1/98-12/98)

169 CONTROL SYSTEM I

Ref	Part Number	Qty	Description
1	060533245	1	CONTROL, COMPUTER board
2	060506740	2	CAP, vent, M 8
3	006334131	1	SCREW, hex, M 8 x 45 -8.8
4	9960921633	2	WASHER, A 8.4
5	060506757	1	SUPPORT, gib
6	9960919108	2	WASHER, 5.3
7	006332685	2	SCREW, hex, M 5 x 20 -8.8
8	006213830	2	NUT, hex, M 8 -8
9	060506765	2	HOLDER,
10	061022352	1	RETAINER,
11	060505756	2	PLATE, LOCKING, washer, VSF M 6
12	060505748	2	SCREW, metal, ST 6.3 x 13
13	9933930001	1	SCREW, hex, M 8 x 20 -8.8
14	060506781	1	BOW,
15	060506773	2	NUT,
16	060506798	1	PANEL, CONTROL, box
17	060506804	1	PLATE, ELEC. SUPPORT, platine
18	9933929651	2	SCREW, hex, M 6 x 14 -8.8
19	9961919927	2	WASHER, SPRING, B 6
20	006213734	2	NUT, hex, M 6 -8
21	4260690181	1	WASHER,
22	9950896150	1	NUT, hex, M 10 -8
23	9933929065	1	SCREW, hex, M 10 x 20 -8.8
24	9933958584	2	SCREW, hex, M 6 x 18 -8.8
25	4260690220	1	RETAINER,
26	9999853100	2	PLATE, LOCKING, washer, VSF M 6
27	9950895502	2	NUT, hex, M 6 -10
28	060508590	1	SWITCH, initiator, Bi 5U-EM18-AN4X/S301
29	4240020101	1	ANGLE BAR,
30	9999853100	2	PLATE, LOCKING, washer, VSF M 6
31	9933929651	2	SCREW, hex, M 6 x 14 -8.8
32	060508590	1	SWITCH, initiator, Bi 5U-EM18-AN4X/S301
33	061009105	1	ANGLE,
34	9999853100	2	PLATE, LOCKING, washer, VSF M 6
35	9933929651	2	SCREW, hex, M 6 x 14 -8.8
36	060508590	1	SWITCH, initiator, Bi 5U-EM18-AN4X/S301
37	4240020101	1	ANGLE BAR,
38	9999853100	2	PLATE, LOCKING, washer, VSF M 6
39	9933929651	2	SCREW, hex, M 6x14 -8.8
40	060508590	1	SWITCH, initiator, Bi 5U-EM18-AN4X/S301
41	061009090	1	ANGLE,
42	060508590	1	SWITCH, initiator, Bi 5U-EM18-AN4X/S301
43	9933929651	2	SCREW, hex, M 6 x 14 -8.8
44	9999853100	2	PLATE, LOCKING, washer, VSF M 6
45	060508638	1	SHIN, LINE connecting

169 CONTROL SYSTEM I

Ref	Part Number	Qty	Description
46	061018604	1	ANGLE,
47	060508590	1	SWITCH, initiator, Bi 5U-EM18-AN4X/S301
48	9999853100	2	PLATE, LOCKING, washer, VSF M 6
49	9933929651	2	SCREW, hex, M 6 x 14 -8.8
50	061009900	1	WASHER, initiator
51	061009917	1	WASHER,
52	9933929065	1	SCREW, hex, M 10 x 20 -8.8
53	061028044	1	HARNESS, TREE cable
54	060505772	1	DIA KIT, HARVESTER, mounting
55	9019974285	1	NO DESCRIPTION, PIPE connecting
56	060508638	1	SHIN, LINE connecting
57	060508590	1	SWITCH, initiator
58	4240020101	1	ANGLE BAR,
59	9933929651	2	SCREW, hex, M 6 x 14 -8.8
60	9961919927	2	WASHER, SPRING, B6

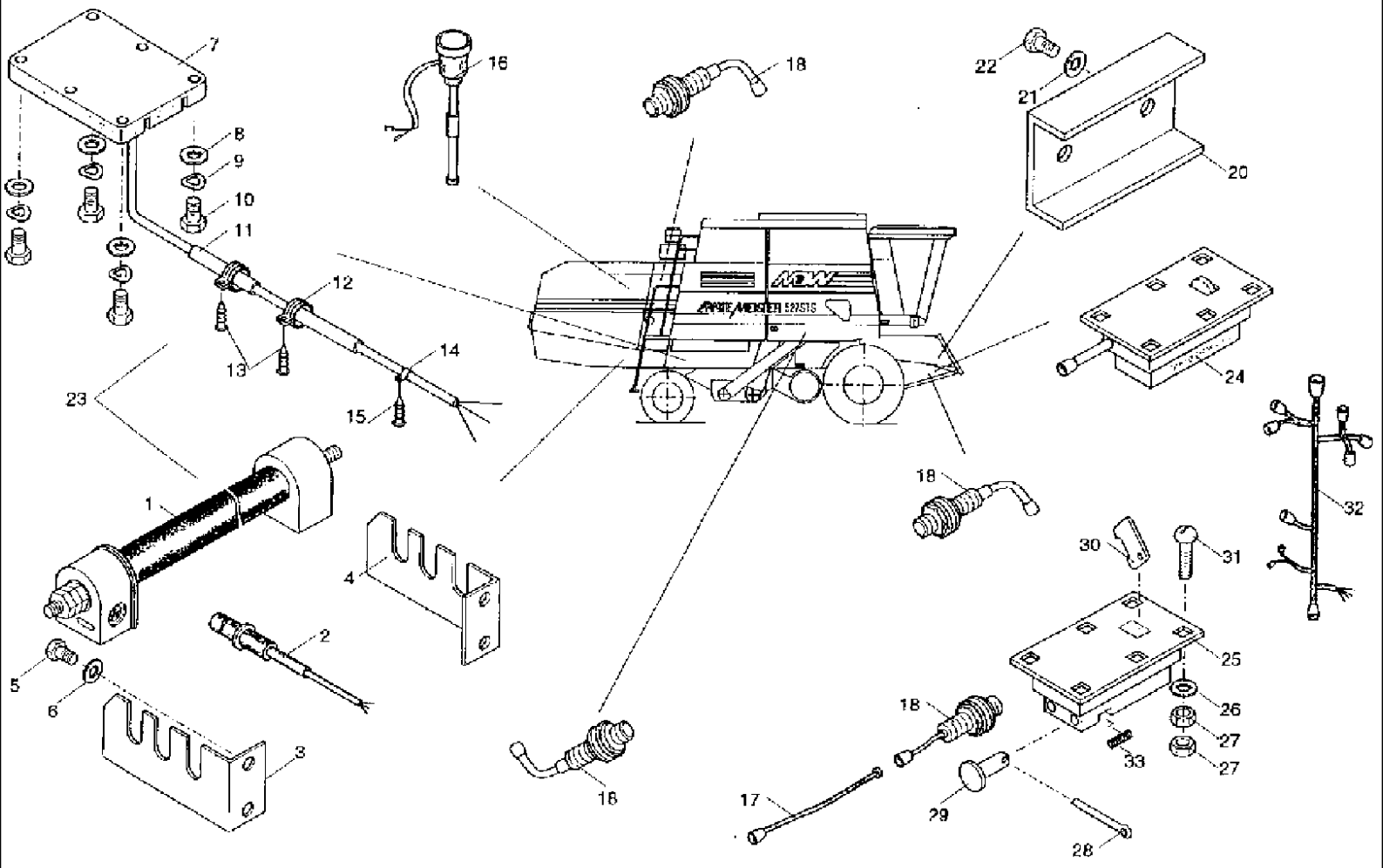
7
16
18
22
21
20
8
9
10
11
12
13
14
15
23
24
1
4
2
5
6
3
18
32
30
31
25
26
27
27
33
18
16
17
29
28

527 CASE IH COMBINE (1/98-12/98)

171 CONTROL SYSTEM II

Ref	Part Number	Qty	Description
1	060506812	1	POINTER, sensor
2	060506820	1	CABLE,
3	061011622	1	CARRIER, support, g
4	061011614	1	CARRIER, support, f
5	9933959415	4	SCREW, hex, M 8 x 22 -8.8
6	9999853117	4	PLATE, LOCKING, washer, VSFM 8
7	060506837	2	PROBE, sensor
8	006510927	4	WASHER, 6.4
9	9961919927	4	WASHER, SPRING, B 6
10	006338385	4	SCREW, hex, M 6 x 16 .8.8
11	060506878	2	GROMMET, NOZZLE cable
12	060506845	2	CLAMP, pipe
13	060506853	2	SCREW, 6.3 x 19
14	060506861	1	CLAMP,
15	9937939272	1	SCREW, metal, 4.2 x 9.5
16	060506226	1	TRANSMITTER,
17	060508621	1	SHIN, LINE connecting
18	060508590	4	SWITCH, initiator, Bi 5U-EM18-AN4X/S301
20	061022746	1	CABLE, guard
21	9999853117	2	PLATE, LOCKING, washer, VSF M 8
22	006340781	2	SCREW, hex, M 8 x 16 -8.8
23	060505764	1	SENSOR, set
24	4260699856	1	SWITCH, crop
25	4260699936	1	BODY,
26	006576010	6	WASHER, locking, VSF M 6
27	006213734	6	NUT, hex, M 6 -8
28	9963949762	1	PIN, SPLIT (COTTER), 3.2 x 16
29	4260707905	1	PIN, LARGE, bolt
30	4260703163	1	LEVER, BUTTON push
31	9945926075	6	SCREW, round head, M 6 x 16
32	061028052	1	HARNESS, TREE cable
33	4260699952	1	SPRING, bending

172 NIPPEL HYFA - S

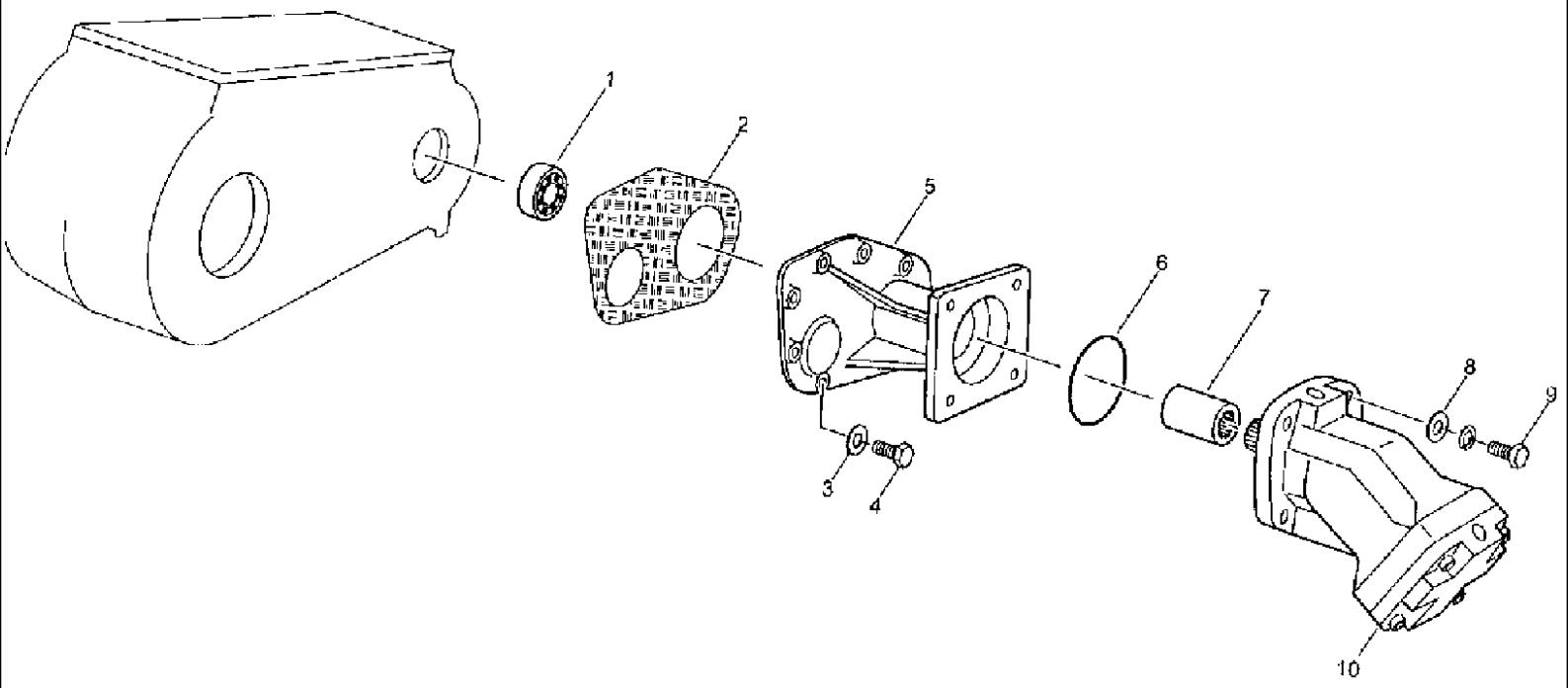

527 CASE IH COMBINE (1/98-12/98)

172 NIPPEL HYFA - S

Ref	Part Number	Qty	Description
1	060515540	1	BEARING, ROLLER taper
2	060515557	1	GASKET,
3	9961911093	9	WASHER, LOCK, RING spring
4	9933931123	9	SCREW, hex, M 10 x 30 -8.8
5	060515565	1	HOUSING, flange
6	060515573	1	O-RING, packing
7	060515581	1	BUSHING, profile
8	9960919237	4	WASHER, 15
9	9933977080	4	SCREW, hex, M 14 x 40 -8.8
10	060504931	1	MOTOR, HYDRAULIC, PISTON axial

173 BRAKE SYSTEM - S

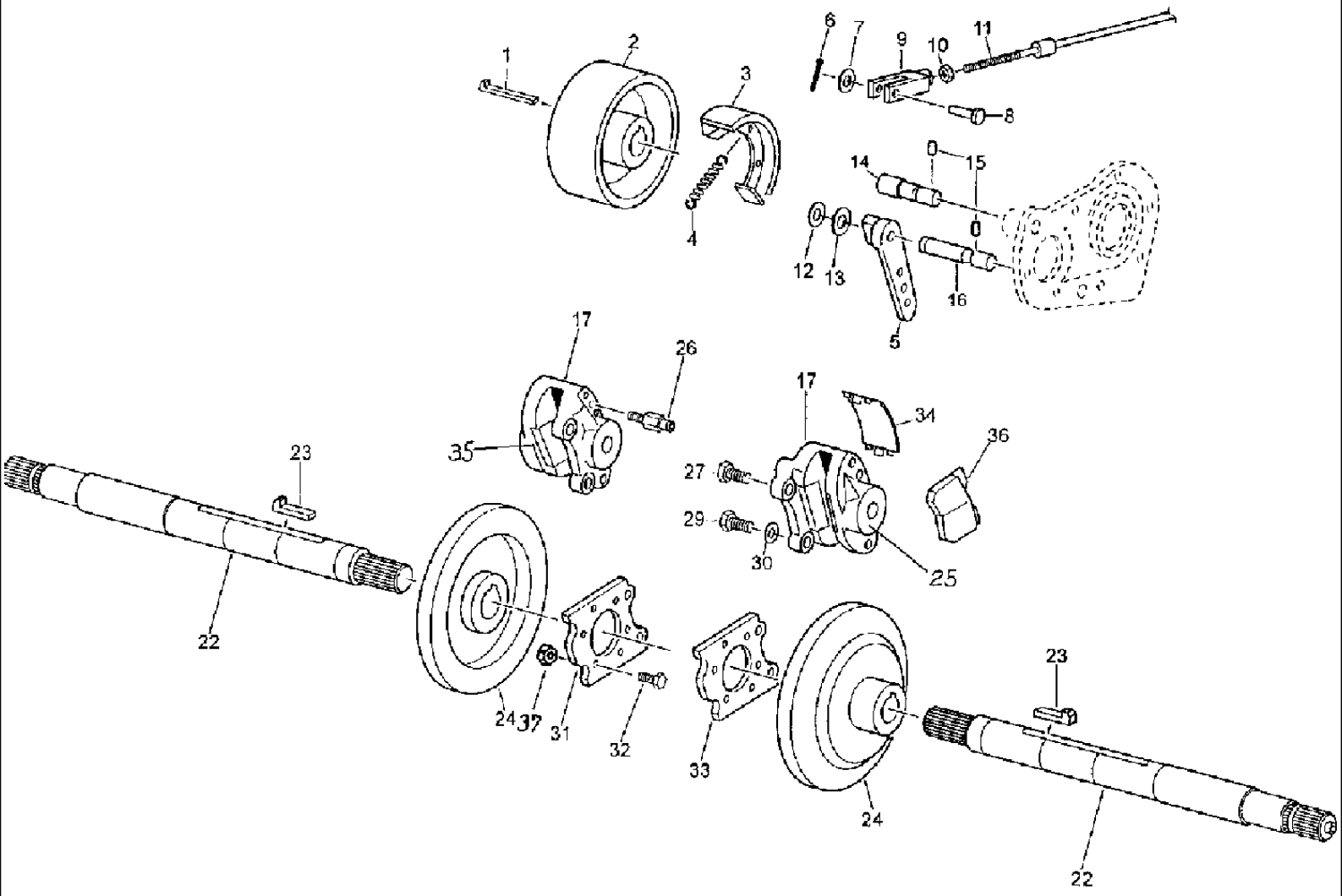

527 CASE IH COMBINE (1/98-12/98)

173 BRAKE SYSTEM - S

Ref	Part Number	Qty	Description
1	003502415	1	KEY, BUCKET TOOTHRT, gib-head, 10 x 8 x 56
2	060515604	1	DRUM, BRAKE,
3	060515612	2	SHOE, BRAKE,
4	060515645	2	SPRING, tension
5	060515653	1	CAM, brake
6	9963949762	1	PIN, SPLIT (COTTER), 3.2 x 16
7	9960923153	1	WASHER, 11
8	9949863072	1	PIN, LARGE, bolt, B10 h11 x 30 x 24
9	9969883232	1	CRADLE, HEAD fork, G10 x 40
10	006213935	1	NUT, hex, M 10 -8
11	061028696	1	BRAKE, cable
12	9964917127	1	CIRCLIP, 14 x 1
13	060515620	1	WASHER, 14 x 30 x 2
14	060515637	1	PIN, LARGE, bolt, 20 x 72
15	006036532	2	SCREW, PIN threaded, M 8 x 16
16	060515661	1	SCREW, bolt
17	060515694	1	KIT, SET repairing
22	060513305	2	SHAFT, counter
23	060513321	2	KEY, gib-head, 14 x 9 x 75
24	060515678	2	BRAKE DISC,
25	060515686	1	CALIPER, BRAKE, SADDLE fixed, f
26	060510882	2	BREATHER, valve
27	060515700	2	SCREW, precision
29	9935960376	2	SCREW, hex, M 16 x 1.5 x 45 -10.9
30	060515717	2	RING, SNAP,
31	060515725	1	FLANGE, g
32	9933932542	12	SCREW, hex, M 12 x 40 -10.9
33	060515733	1	FLANGE, f
34	060515741	2	COVER, sealing
35	060515758	1	CALIPER, BRAKE, SADDLE fixed, g
36	060515766	2	BRAKE, PAD, lining
37	9950896310	12	NUT, hex, M 12 -10

174 BEVEL GEAR TRAIN-GRAIN TANK FILLING AUGER

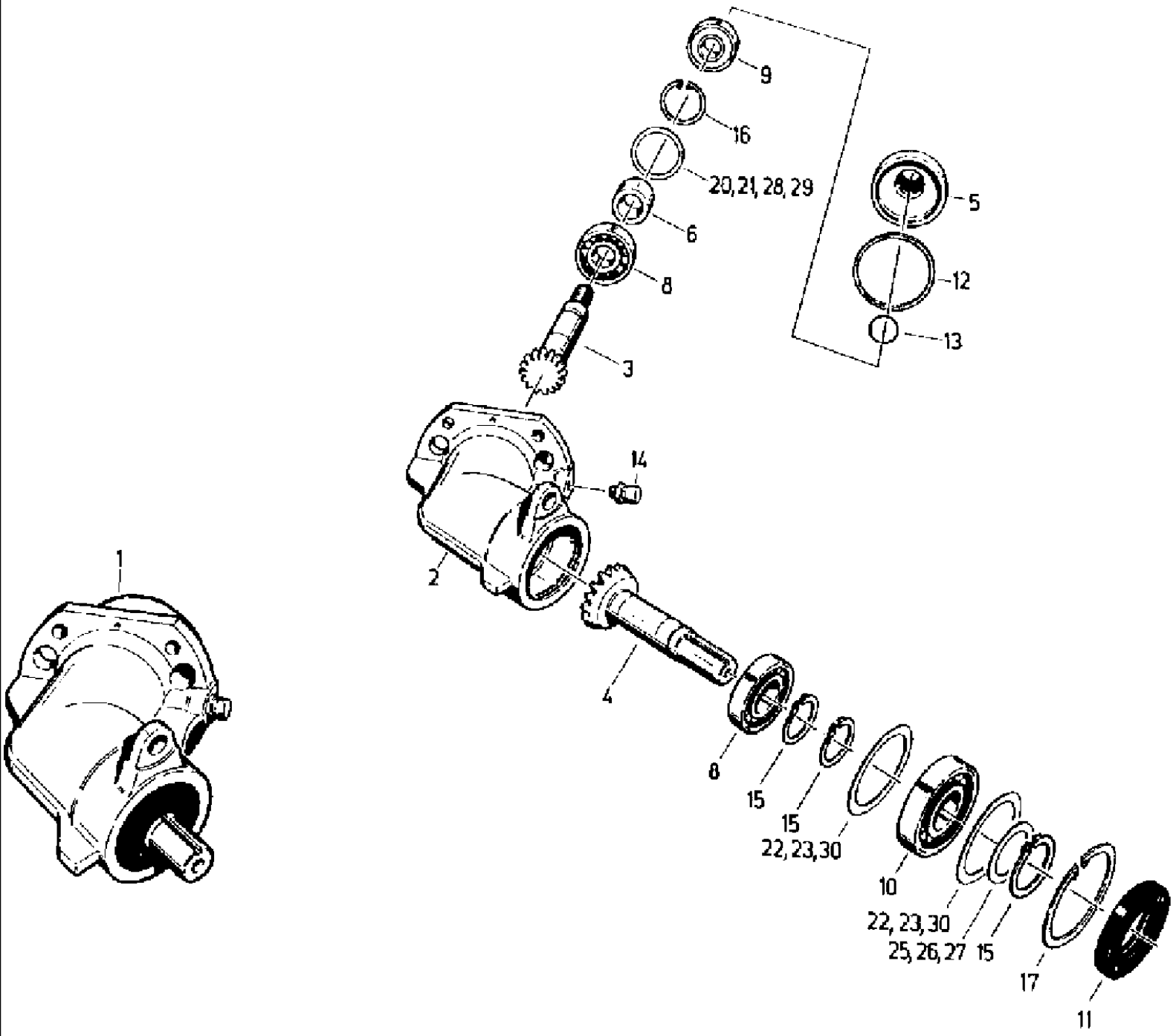

527 CASE IH COMBINE (1/98-12/98)

174 BEVEL GEAR TRAIN-GRAIN TANK FILLING AUGER

Ref	Part Number	Qty	Description
1	020058363	1	TRANSMISSION, WHEEL bevel
1	060515155	1	GEAR, TRANSMISSION bevel, wheel, regeneriert
2	065501547	1	CASE,
3	065501563	1	SHAFT, WHEEL bevel
4	065501610	1	SHAFT, WHEEL bevel
5	065501522	1	COVER, ke
6	065501588	1	BUSHING,
8	9902890466	2	BEARING, ball, 6206
9	003680632	1	BEARING, ball, 6206 NLLU
10	9902890892	1	BEARING, ball, 6306
11	001128557	1	SEAL, shaft, R 30 x 72 x 8 UEN
12	001169524	1	SEAL, V, WVA-0075-N60B-AF
13	9907913670	1	O-RING, 25 x 3
14	006108934	1	VALVE BLEEDER,
15	9964917215	3	CIRCLIP, 30 x 1.5
16	9964917818	1	CIRCLIP, 62 x 2
17	9964917826	1	CIRCLIP, 72 x 2.5
20	9965920636	2	SHIM, precision, 50 x 62 x 0.2
21	9965920644	1	SHIM, precision, 50 x 62 x 0.5
22	006628007	4	SHIM, precision, 62 x 72 x 0.2
23	006628056	2	SHIM, precision, 62 x 72 x 0.5
25	9965920757	1	SHIM, precision, 30 x 42 x 0.5
26	9965920837	2	SHIM, precision, 30 x 42 x 0.2
27	006608614	2	SHIM, precision, 30 x 42 x 0.1
28	006609262	1	SHIM, precision, 50 x 62 x 2
29	006609238	2	SHIM, precision, 50 x 62 x 0.1
30	006627996	3	SHIM, precision, 62 x 72 x 0.1

175 BEVEL GEAR TRAIN-ASCENDING AUGER, BOTTOM

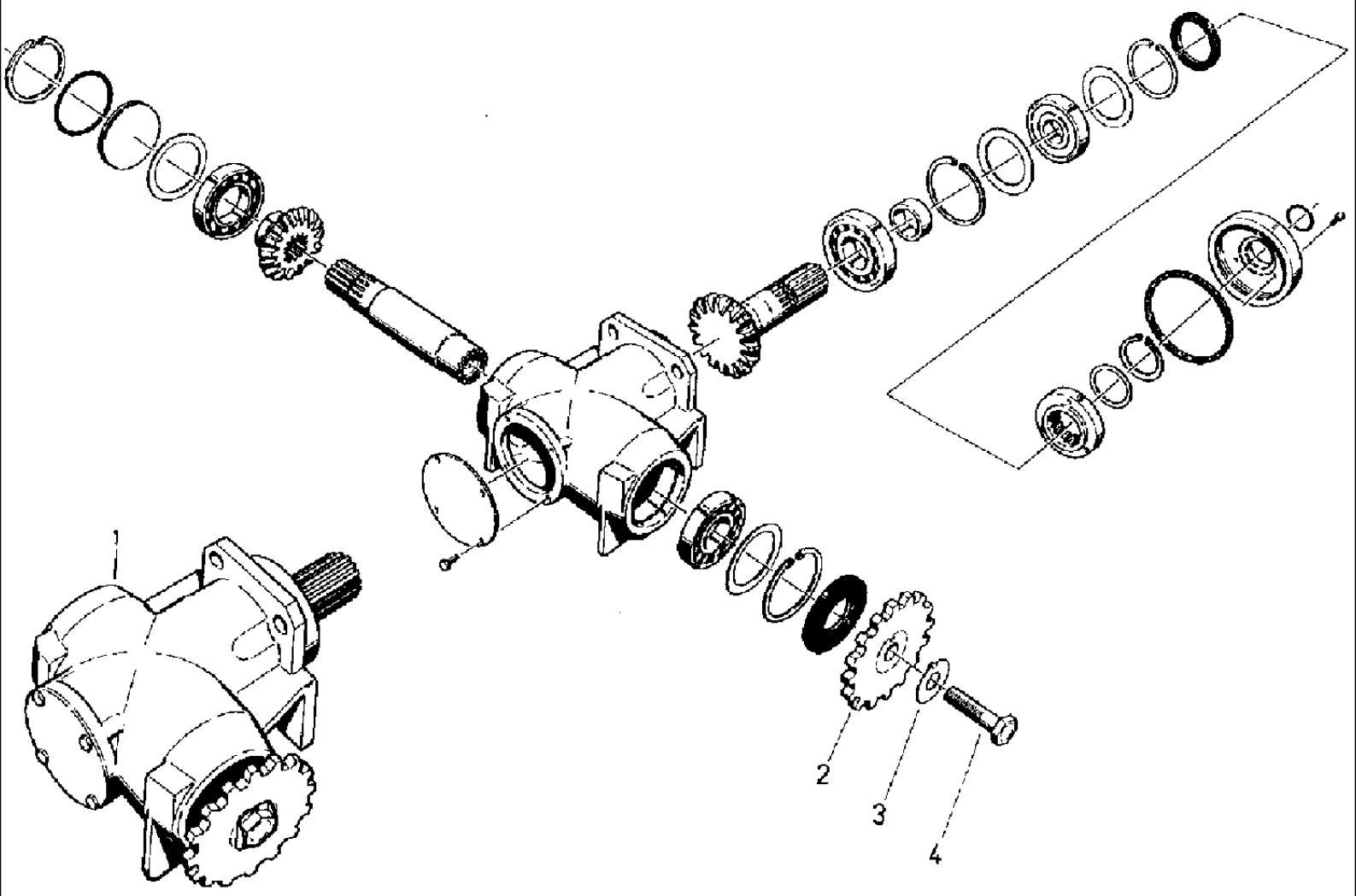

527 CASE IH COMBINE (1/98-12/98)

175 BEVEL GEAR TRAIN-ASCENDING AUGER, BOTTOM

Ref	Part Number	Qty	Description
1	020053012	1	GEAR, TRANSMISSION bevel wheel
1	060194291	1	GEAR, TRANSMISSION bevel wheel, regeneriert
2	4260687940	1	DRIVE SPROCKET,
3	9962923666	1	PLATE, LOCKING, washer, 17
4	9934933181	1	SCREW, hex, M 16 x 1.5 x 55 -8.8

176 BEVEL GEAR TRAIN - ASCENDING AUGER, TOP

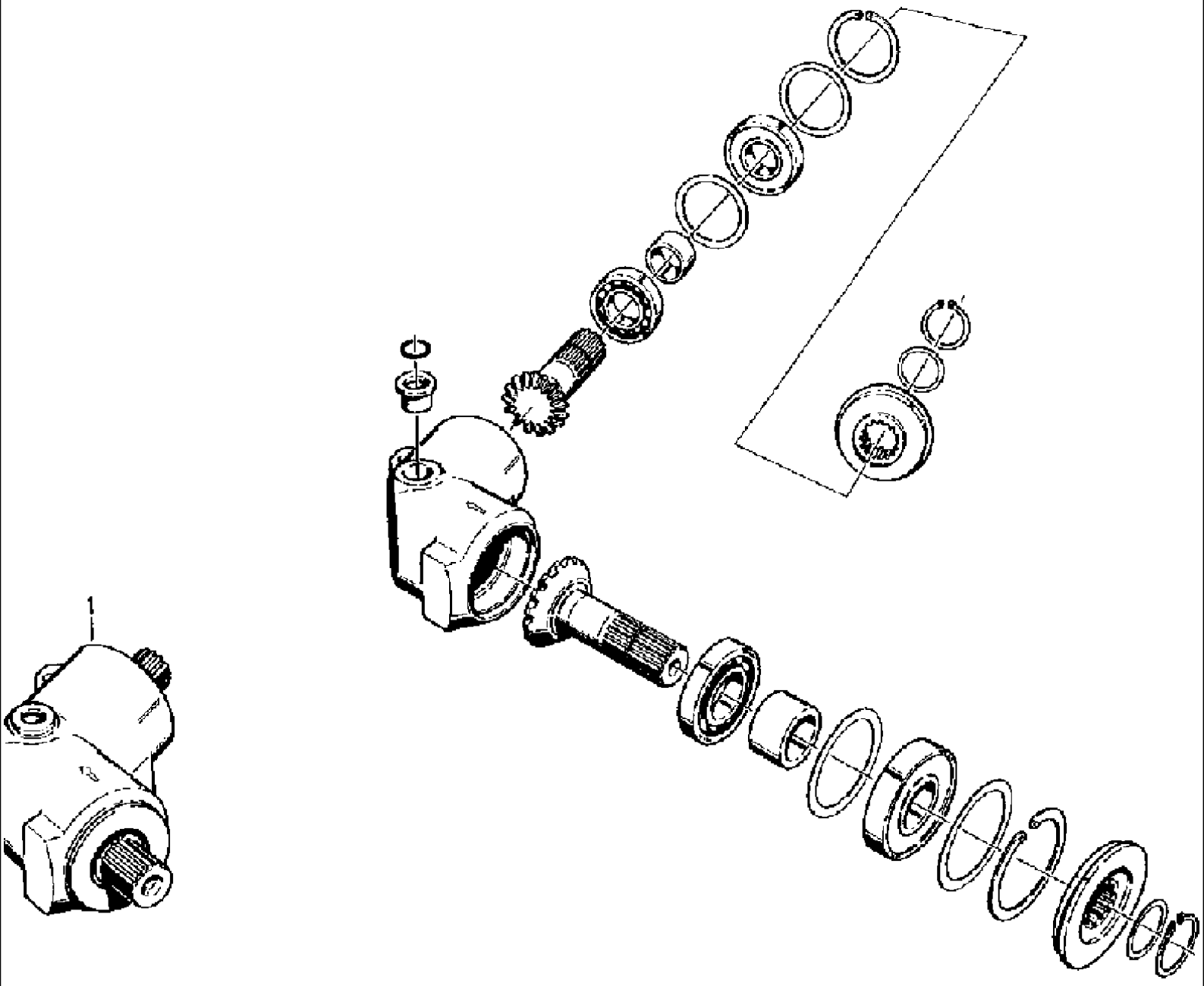

527 CASE IH COMBINE (1/98-12/98)

176 BEVEL GEAR TRAIN - ASCENDING AUGER, TOP

Ref	Part Number	Qty	Description
1	4260688218	1	GEAR, TRANSMISSION bevel, wheel
1	060194275	1	GEAR, TRANSMISSION bevel wheel, regeneriert

177 THRESHING DRUM GEAR

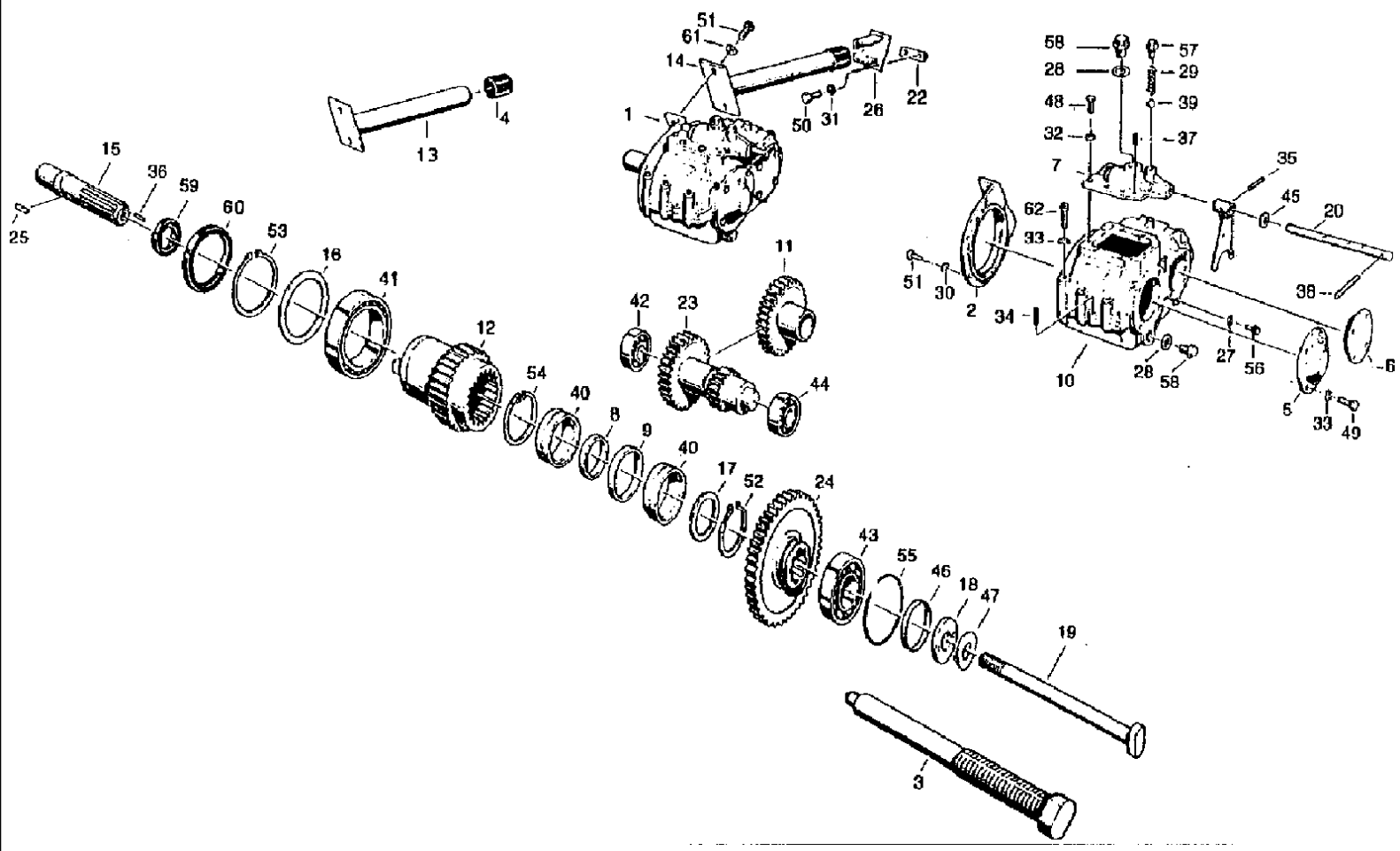

527 CASE IH COMBINE (1/98-12/98)

177 THRESHING DRUM GEAR

Ref	Part Number	Qty	Description
1	060506000	1	TRANSMISSION,
1	060515188	1	TRANSMISSION, regeneriert
2	4228653513	1	HOLDER, cover
3	4228639636	1	SCREW, puller
4	4260696685	1	HOSE, LARGE, PART dampening
5	4228653466	1	COVER,
6	4228653490	1	COVER,
7	4228653546	1	COVER,
8	4228653320	1	SPACER, ring
9	4228653337	1	SPACER, ring
10	4228653232	1	HOUSING, transmission
11	4228653273	1	SHAFT, GEAR straight spur, 34 Z
12	4228653378	1	SHAFT, BUSH gear, 29 Z
13	4228650664	1	ROD, retaining
14	4260696677	1	ROD, retaining
15	065510363	1	SHAFT, hollow
16	4228653386	1	RING,
17	4228653345	1	WASHER,
18	4228653425	1	WASHER,
19	4228653433	1	SCREW,
20	4228653554	1	ROD, SHAFT sliding, selector
21	4228653562	1	FORK, SHIFTER, selector
22	4260696660	1	PLATE,
23	065500923	1	SHAFT, GEAR, spur
24	065500931	1	PINION, GEAR straight spur, 39 Z
25	4228653312	1	VANEUM GAUGE, PLATE closing
26	4260696652	1	SUPPORT, abutment
27	004103007	1	GASKET, A 10 x 13.5
28	9970909217	2	GASKET, A 26 x 32
29	9973880282	1	SPRING, COMPRESSION, C 1, 4 x 10 x 7.5
30	9961911085	6	WASHER, LOCK, spring, B 10
31	9961920004	2	WASHER, SPRING, B 10
32	9961919910	8	WASHER, SPRING, B 6
33	9961920061	18	WASHER, SPRING, B 8
34	9967943327	2	PIN, grooved, 5 x 25
35	9967943247	1	PIN, grooved, 5 x 30
36	9967943392	1	PIN, grooved, 6 x 16
37	9967942496	2	PIN, grooved, 5 x 16
38	9967941325	1	PIN, grooved, 10 x 80
39	9903886661	1	BALL, 13/32"
40	9902888840	2	BEARING, NEEDLE, Na 4913
41	9902890177	1	BEARING, ball, 6022
42	9902890490	1	BEARING, ball, 6207
43	9902890595	1	BEARING, ball, 6210-N
44	9902890907	1	BEARING, ball, 6307

177 THRESHING DRUM GEAR

Ref	Part Number	Qty	Description
45	9907913437	2	O-RING, 18 x 2
46	9907913517	1	O-RING, 20 x 2
47	9962923826	1	WASHER, 21
48	9930977163	8	SCREW, hex, M 6 x 20 -8.8
49	9933929173	8	SCREW, hex, M 8 x 25 -8.8
50	006344037	2	SCREW, hex, M 10 x 25 -8.8
51	9933931123	8	SCREW, hex, M 10 x 30 -8.8
52	9964917360	1	CIRCLIP, 65 x 2.5
53	9964917432	1	CIRCLIP, 110 x 4
54	9964917850	1	CIRCLIP, 90 x 3
55	9962918170	1	CIRCLIP, Sp 90
56	9946936228	1	VANEUM GAUGE, PLUG screw, AM 10 x 1 -5.8
57	9946936340	1	VANEUM GAUGE, PLUG screw, AM 12 x 1.5 -5.8
58	9946937085	1	VANEUM GAUGE, PLUG screw, CM 26 x 1.5-5.8
59	9905872002	1	SEAL, shaft, A 70 x 90 x 10
60	9905872357	1	SEAL, shaft, A 110 x 140 x 12
61	9999853166	2	PLATE, LOCKING, washer, VSF B10
62	9937985526	10	SCREW, cheese-head, M 8 x 70 -8.8

179 BEVEL WHEEL TRANSMISSION, GRAIN TANK

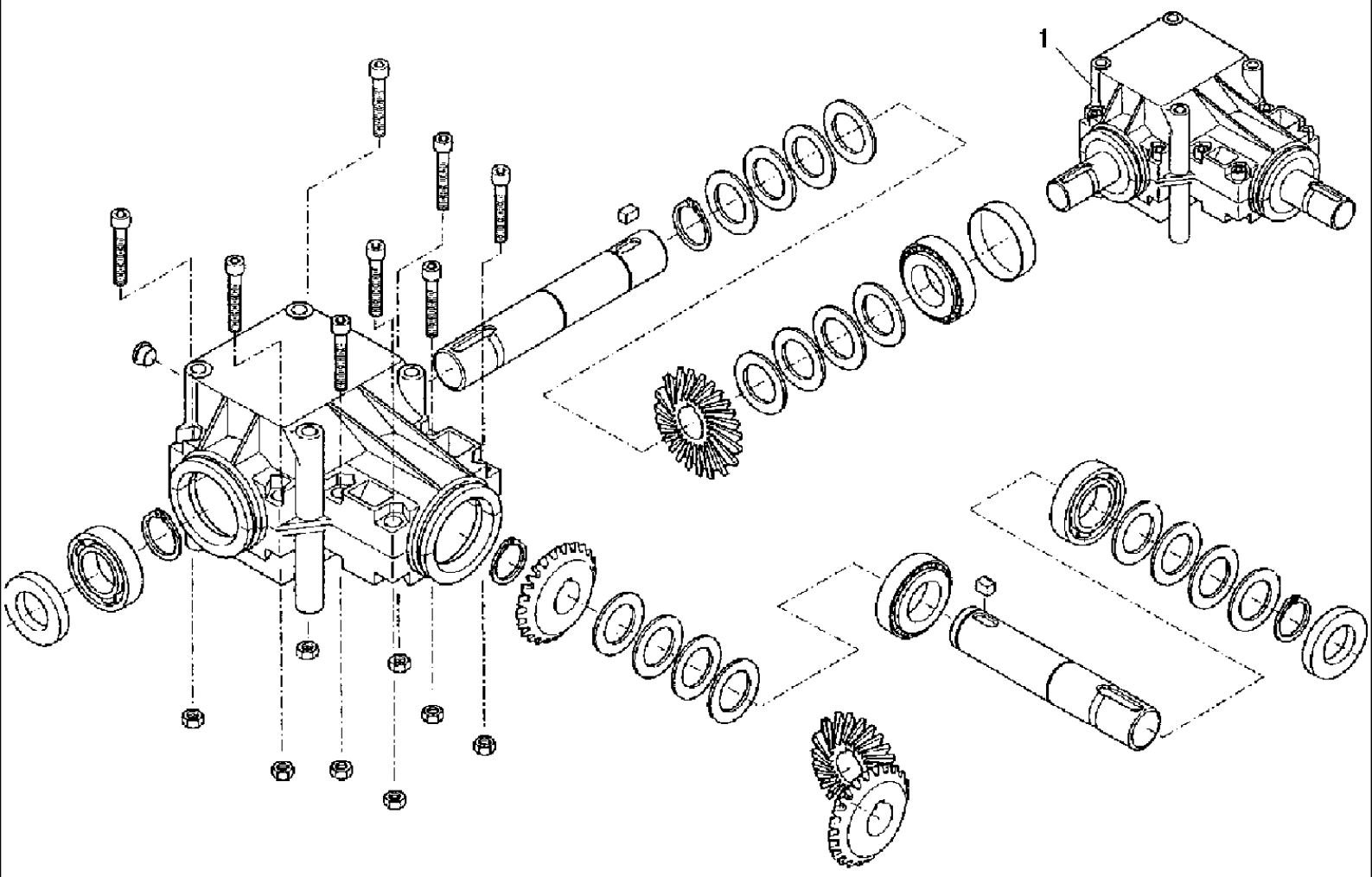

527 CASE IH COMBINE (1/98-12/98)

179 BEVEL WHEEL TRANSMISSION, GRAIN TANK

Ref	Part Number	Qty	Description
1	060503168	1	GEAR, TRANSMISSION bevel, wheel
1	060515171	1	GEAR, TRANSMISSION bevel, wheel, regeneriert

180 FINAL DRIVE, L.H. AND R.H.

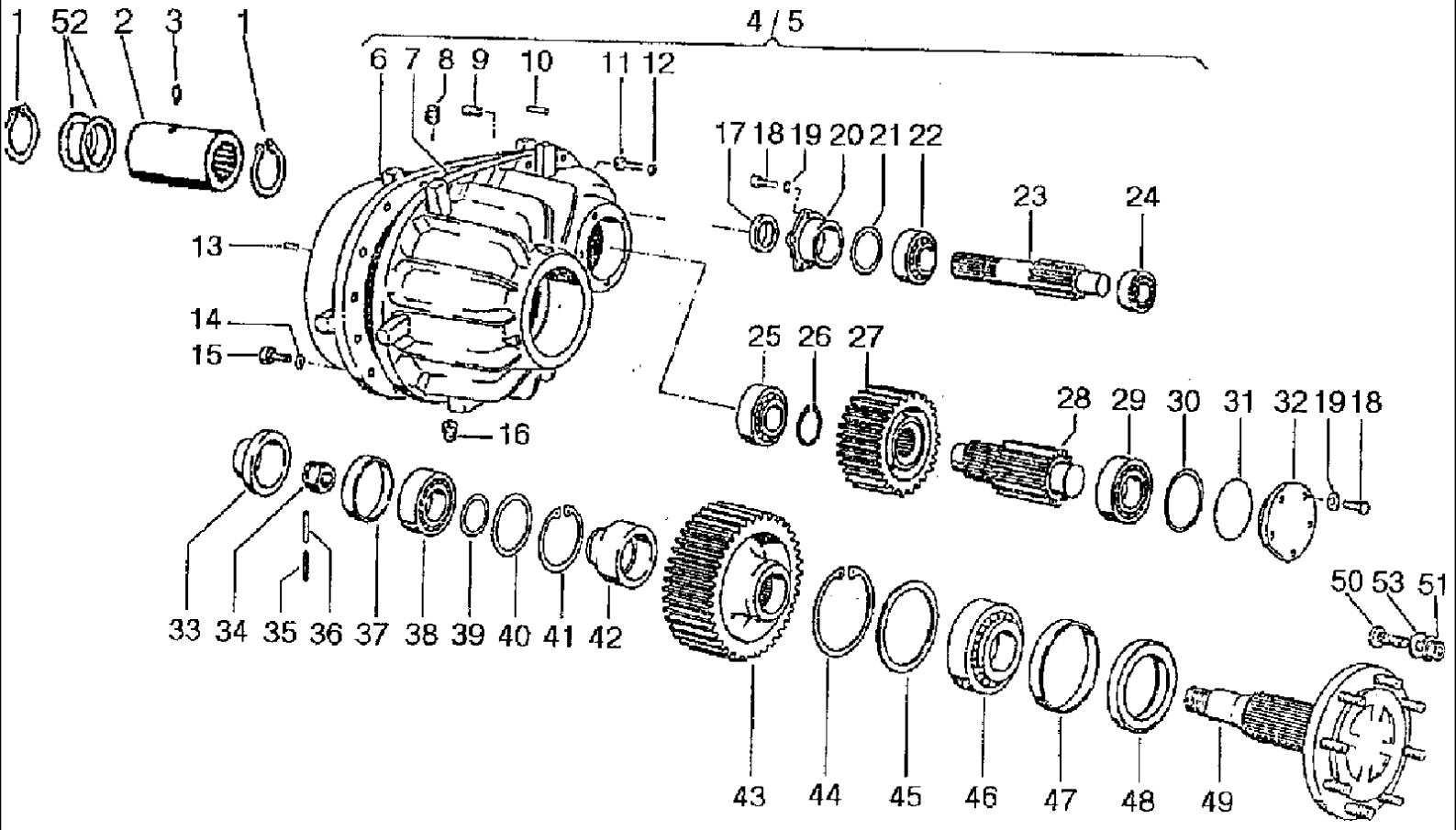

527 CASE IH COMBINE (1/98-12/98)

180 FINAL DRIVE, L.H. AND R.H.

Ref	Part Number	Qty	Description
1	97034046	4	CIRCLIP, 45 x 2.5
2	98043084	2	BUSHING, profile
3	236942N0	2	NIPPLE, LUBE,
4	060513362	1	TRANSMISSION, DRIVE final, l.h. f
5	060513370	1	GEARBOX, DRIVE final, r.h. g
6	03266708	1	HOUSING, axle, l.h. f
6	03266757	1	HOUSING, axle,r.h. g
7	03266804	1	HOUSING, axle, l.h. f
7	03266853	1	HOUSING, axle, r.h. g
8	03223064	2	VANEUM GAUGE, PLUG screw, M 24 x 1.5
9	03222963	2	BREATHER, M 10 x 1
10	03266900	4	SPLIT PIN/SAFETY PIN, cylindrical, 16M6 x 55
11	06284547	2	SCREW, socket head, M 12 x 40
12	242824N1	2	WASHER, circlip, Vskz 12
13	06109767	2	SCREW, plug, M 10 x 1
14	03266958	30	WASHER, LOCK, spring
15	060165664	24	SCREW, socket head, M 16 x 50
15	03266564	6	SCREW, socket head, M 16 x 60
16	03222416	2	PLUG, magnetic, M 24 x 1.5
17	03266611	2	SEAL, OIL, radial, As 45 x 72 x 8
18	06335358	20	SCREW, hex, M 10 x 25
19	03253568	20	WASHER, LOCK, spring, A 10
20	03266660	2	COVER,
21	233202N0		RING ASSY., shim n.B., 75 x 85 x 0.1
21	233203N0		RING ASSY., shim n.B., 75 x 85 x 0.3
21	233204N0		RING ASSY., shim n.B., 75 x 85 x 0.5
22	03266716	2	BEARING, ROLLER, Ta., 332 09
23	03266765	2	SHAFT, GEAR, pinion
24	03671246	2	BEARING, BALL, Ta., 332 08
25	97061259	2	BEARING, ROLLER, Ta., 303 10
26	03266812	2	CIRCLIP, 67 x 2.5
27	03266861	2	GEAR, WHEEL, spur, 37 Z
28	03266917	2	COUNTERSHAFT,
29	03266966	2	BEARING, ROLLER, Ta., 303 11A
30	233009N0		DISC, shim n.B., 100 x 120 x 0.1
30	06635102		SHIM, n.B., 100 x 120 x 0.3
30	06635110		SHIM, n.B., 100 x 120 x 0.5
31	03266572	2	O-RING, 113, 89 x 3.53-N
32	03266628	2	COVER,
33	03266677	2	COVER, D 120
34	03222883	2	NUT, castellated, M 42 x 1.5
35	06161754	2	PIN, expansion, 5 x 60
36	97032197	2	SPLIT PIN/SAFETY PIN, expansion, 8 x 60
37	03266724	2	RING, spacer, 12 x 4 x 351
38	03266773	2	BEARING, ROLLER, Ta., 323 11B

180 FINAL DRIVE, L.H. AND R.H.

Ref	Part Number	Qty	Description
39	239370N0		DISC, n.B., 55 x 68 x 1
40	97022260	2	WASHER, back-up, S100 x 120
41	06453523	2	CIRCLIP, 120 x 4
42	03266820	2	RING, spacer
43	03266878	2	GEAR, WHEEL, spur, 47 Z.
44	06453732	2	CIRCLIP, 180 x 4
45	03266925	2	WASHER, back-up, S 150 x 180
46	03266974	2	BEARING, ROLLER, Ta., 322 20
47	03266580	2	RING, spacer, 14 x 4 x 540
48	03266636	2	SEAL, OIL, radial, B2 140 x 180 x 15
49	03266685	2	HALF SHAFT, wheel
50	060520490	16	WHEEL SHAFT, bolt, M 22 x 1.5 x 65
51	97022100	16	NUT, PIECE thrust, H22
52	98039644		WASHER, n.B., 45 x 65 x 0.75

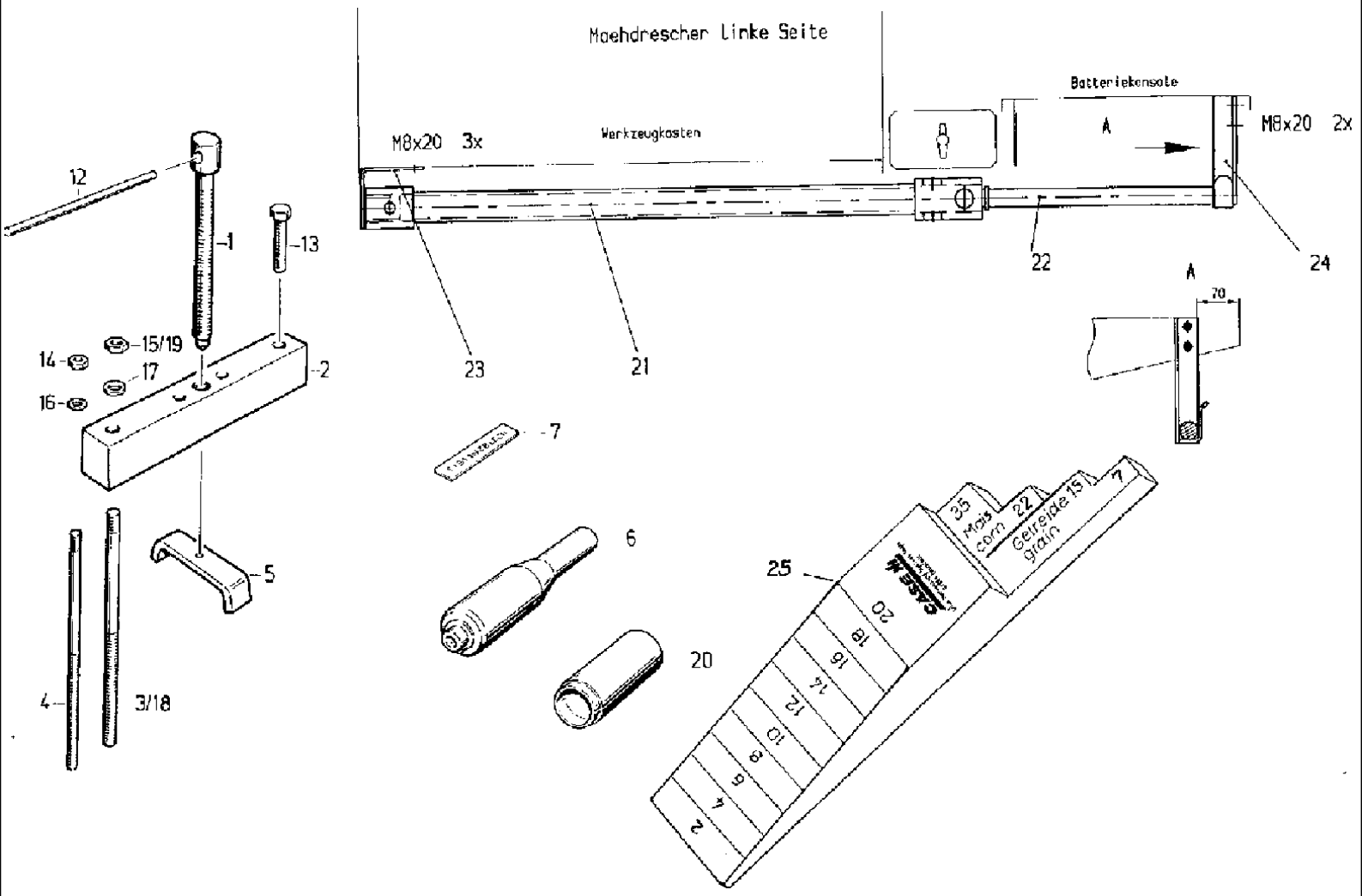
Maehdrescher Linke Seite
Batteriekensole
M8x20 3x
Werkzeugkasten
M8x20 2x
A
12
1
13
15/19
14
17
16
2
23
21
22
24
70
7
6
20
25
5
4
3/18
Mais
corn
Getreide
grain

182 SPECIAL TOOLS

Ref	Part Number	Qty	Description
1	4247035970	1	SPINDLE, screw
2	4221650822	1	CROSSBAR, member
3	4247035987	2	HOOK, spindle
4	4247035995	2	HOOK, spindle
5	060184097	1	BRIDGE,
6	4260708352	1	SHAFT,
7	4247033487	1	SHEET, spacer
12	4240054520	1	PIN, handle, A 14
13	060508695	2	SCREW, hex, M 16 x 1.5 x 200 -8.8
14	006213935	2	NUT, hex, M 10 -8
15	006214140	2	NUT, hex, M 12 -8
16	9965963638	4	WASHER, 11 x 32 x 3
17	9965919298	4	WASHER, 14 x 32 x 3
18	4221650902	2	SPINDLE,
19	9950896841	2	NUT, hex, M 16 -8
20	061024668	1	BUSHING,
21	061033878	1	ROD,
22	061037254	1	TOGGLE, lock
23	061037463	1	BRACKET, holder
24	061037430	1	SUPPORT, holder
25	061072788	1	SLIDER, GAUGE adjusting

183 FLOOR PROTECTION, FRONT

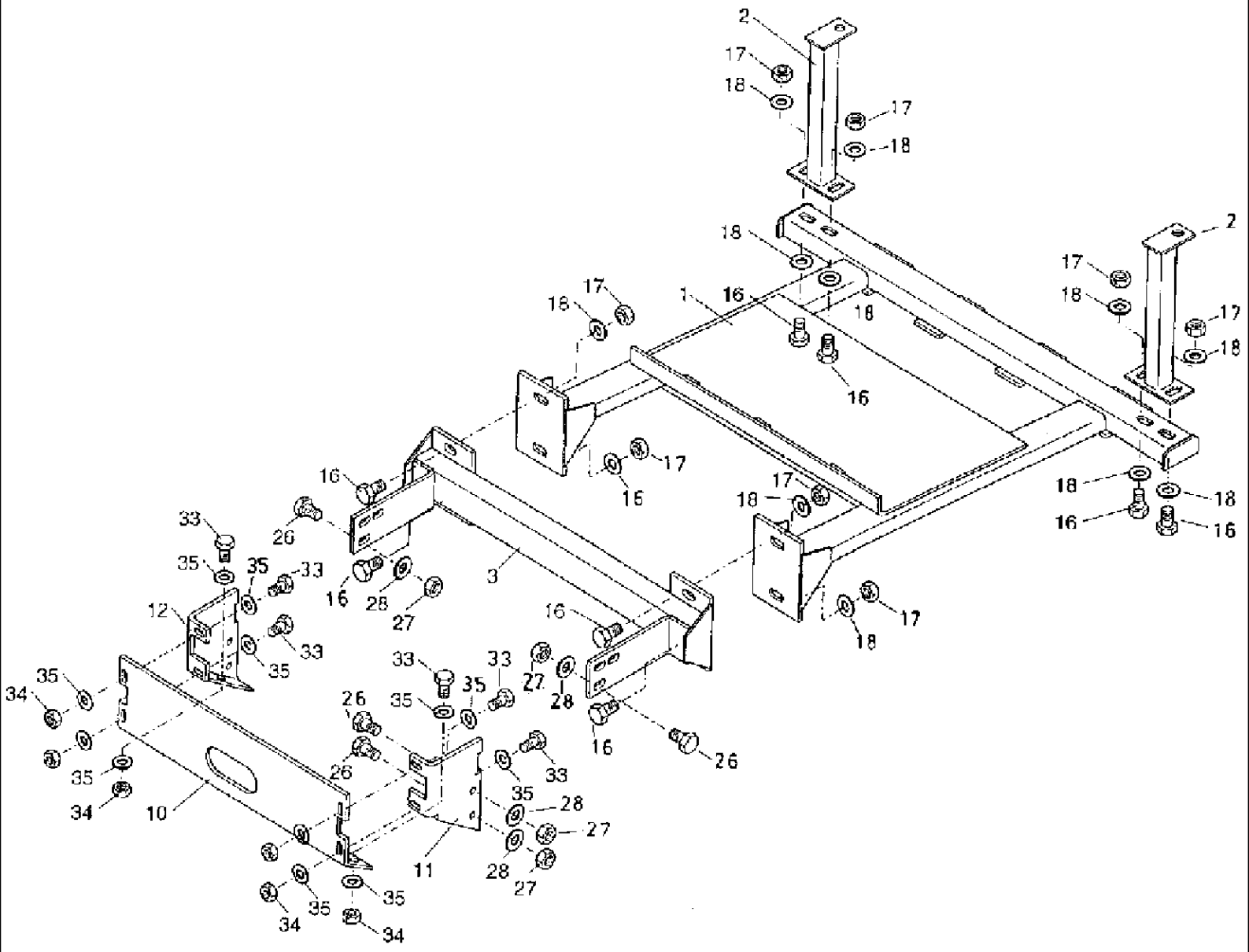

527 CASE IH COMBINE (1/98-12/98)

183 FLOOR PROTECTION, FRONT

Ref	Part Number	Qty	Description
1	061024563	1	PROTECTOR,
2	061012158	2	SUPPORT,
3	061024635	1	HOLDER, intake
10	061024676	1	PROTECTOR,
11	061024684	1	BRACKET, f
12	061024692	1	BRACKET, g
16	006344037	8	SCREW, hex, M 10 x 25 -8.8
17	006213935	8	NUT, hex, M 10 -8
18	9999853166	8	PLATE, LOCKING, washer, VSF B 10
26	9933929173	10	SCREW, hex, M 8 x 25 -8.8
27	006213830	10	NUT, hex, M 8 -8
28	9999853158	10	PLATE, LOCKING, washer, VSF B 8
33	9930977163	6	SCREW, hex, M 6 x 20 -8.8
34	006213734	6	NUT, hex, M 6 -8
35	060150770	12	PLATE, LOCKING, washer, VSF B 6

527 CASE IH COMBINE (1/98-12/98)

184 FLOOR PROTECTION, REAR

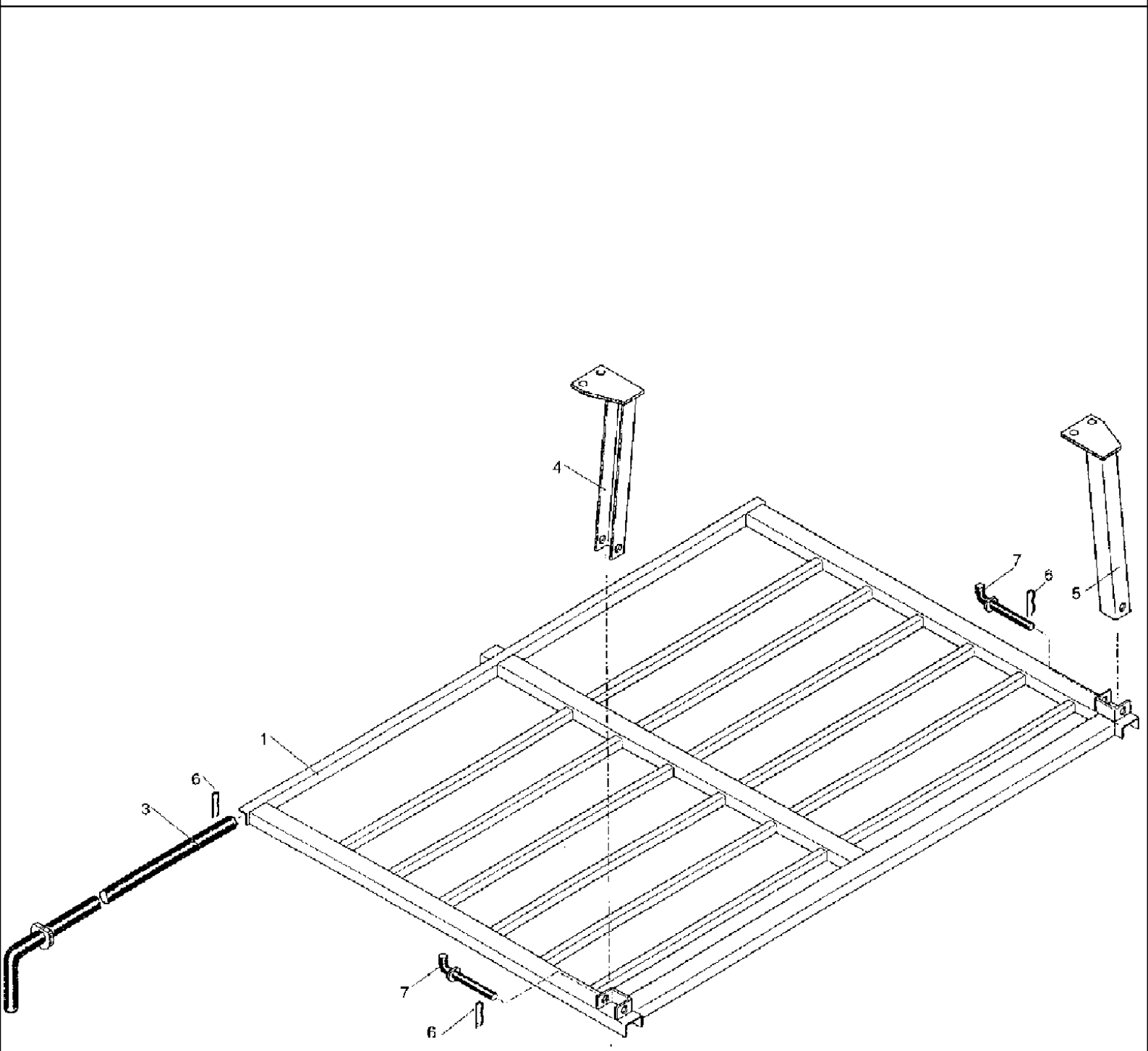

527 CASE IH COMBINE (1/98-12/98)

184 FLOOR PROTECTION, REAR

Ref	Part Number	Qty	Description
1	060132777	1	PROTECTOR,
3	060132785	1	ROD,
4	061012182	1	SUPPORT, f
5	061012213	1	SUPPORT, g
6	060508814	3	SPLIT PIN/SAFETY PIN, hair cotter
7	9928939730	2	PIN, SPLIT (COTTER), BOLT handle, 20 x 125

185 SET OF ADDITIONAL WEIGHTS

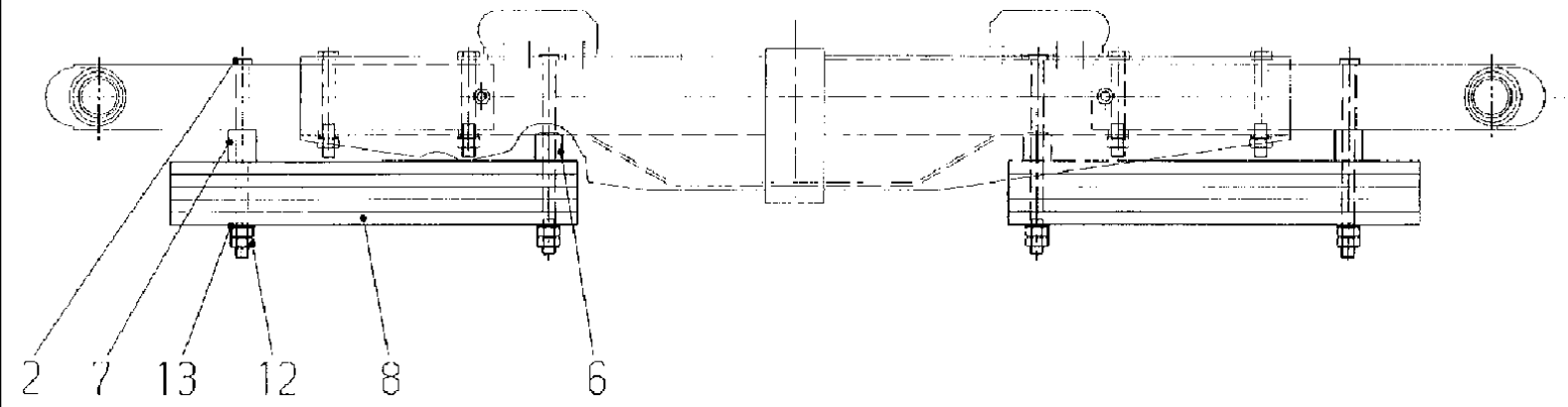

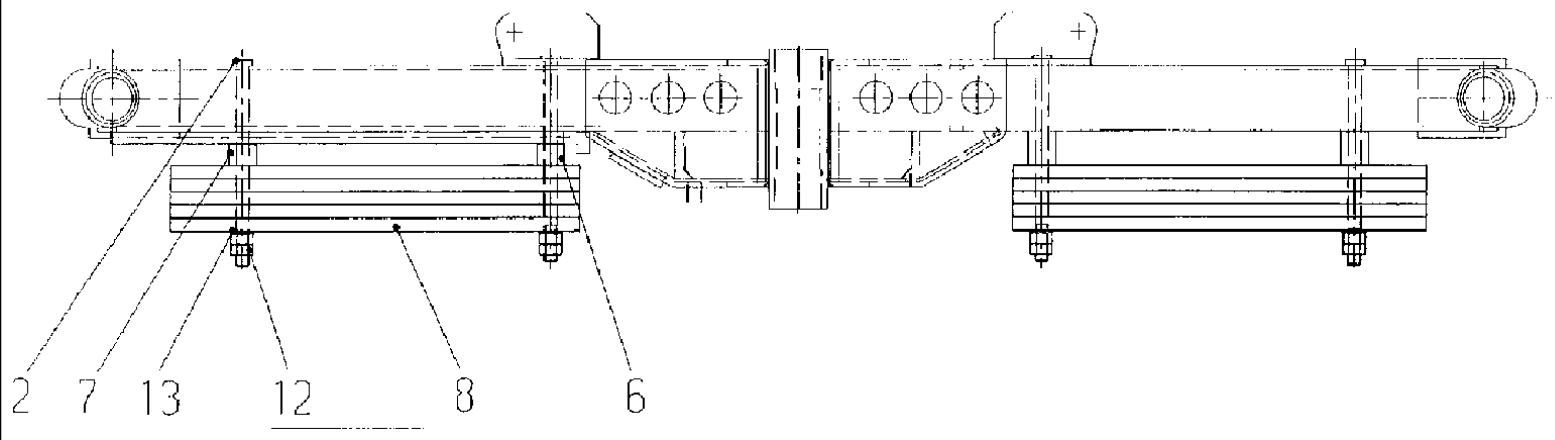

527 CASE IH COMBINE (1/98-12/98)

185 SET OF ADDITIONAL WEIGHTS

Ref	Part Number	Qty	Description
2	061014440	4	PIN, LARGE, bolt
6	061014473	2	PLUG, PIECE spacer
7	061014481	2	PLUG, PIECE spacer
8	060077463	10	WEIGHT, additional
12	9950897617	8	NUT, hex, M 20 -8
13	9960922546	4	WASHER, 22

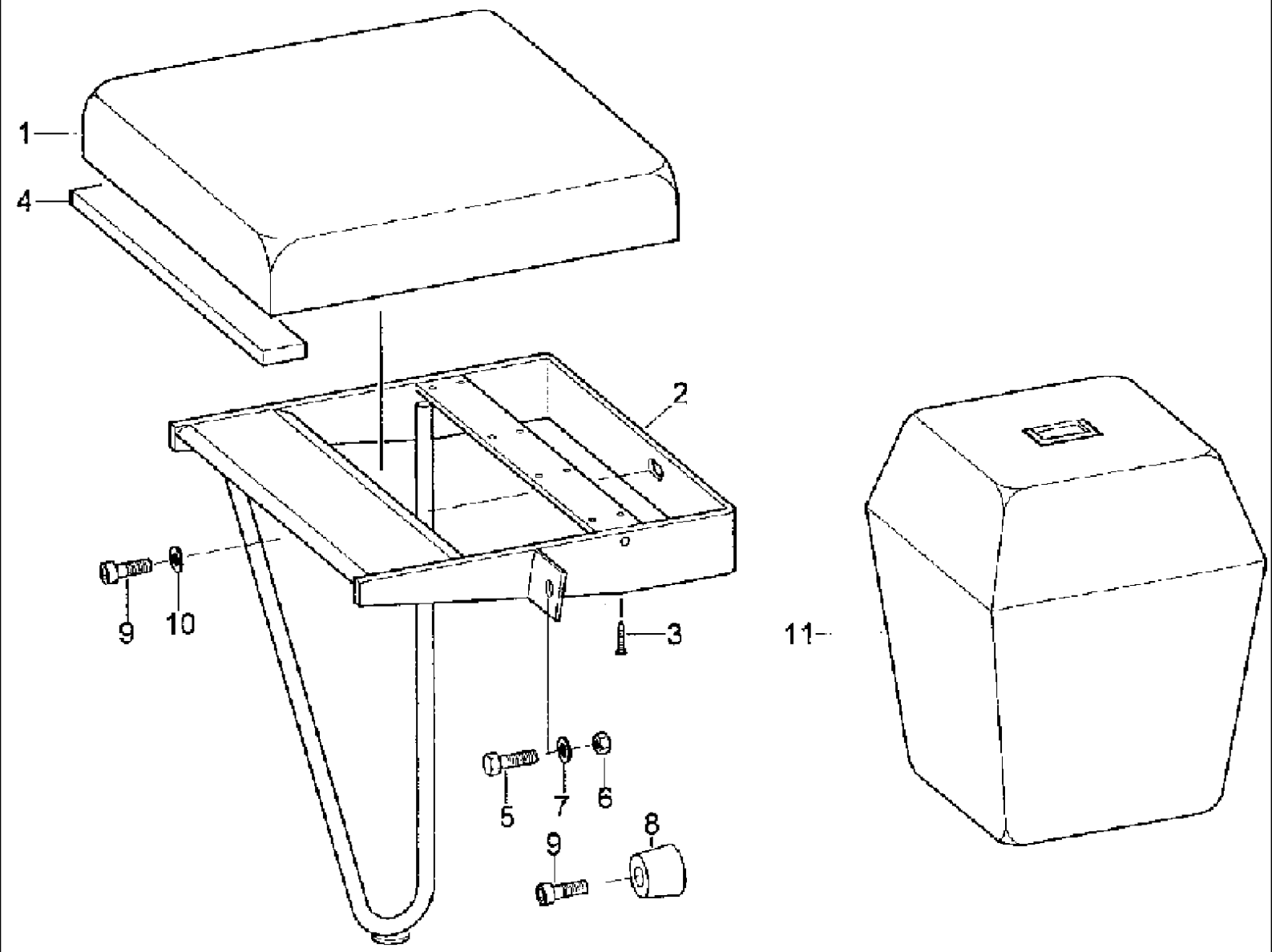
1
4
2
9
10
3
11
5
7
6
8
9

527 CASE IH COMBINE (1/98-12/98)

186 SEAT / COOLBOX

Ref	Part Number	Qty	Description
1	061032885	1	SEAT,
2	061032908	1	FRAME,
3	060503867	8	SCREW, metal, 4.8 x 19
4	061032893	1	BLOCK, shim
5	9933930001	1	SCREW, hex, M 8 x 20 -8.8
6	006213830	1	NUT, hex, M 8 -8
7	9999853117	1	PLATE, LOCKING, washer, VSF M 8
8	9972879345	1	BUFFER, RUBBER, foot 28
9	003790750	2	SCREW, cylinder, M 10 x 30 -8.8
10	9999853094	1	PLATE, LOCKING, washer, VSF M 10
11	060512763	1	COOLER ASSY., coolbox

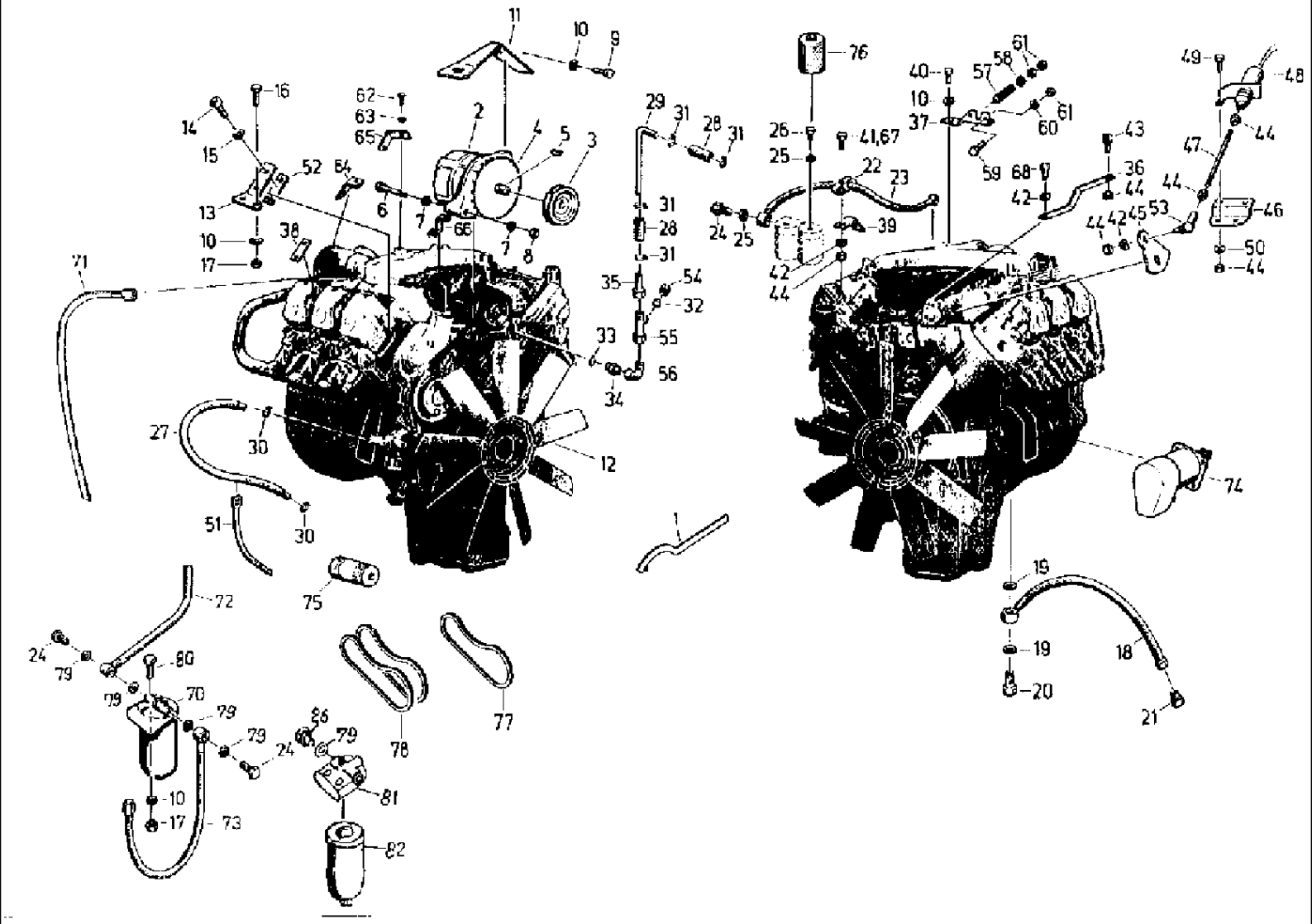
11
10
9
16
14
15
62
63
65
2
4
5
3
52
64
13
6
7
66
7
8
10
17
38
71
29
31
28
31
31
28
31
35
54
32
33
55
56
34
27
30
12
51
30
75
1
72
24
79
80
79
70
79
79
24
86
79
78
77
10
17
73
81
82
76
40
10
37
57
58
61
61
60
59
68
26
25
41,67
22
23
39
24
25
42
44
43
36
44
42
44
42
45
53
49
48
44
47
46
50
44
74
19
19
18
20
21

527 CASE IH COMBINE (1/98-12/98)

187 ENGINE, 199 KW

Ref	Part Number	Qty	Description
1	4270721758	1	TOOL, lever
2	060503192	1	ALTERNATOR, DYNAMO three phase
3	061013431	1	GROOVED PULLEY, v-belt
4	9019635918	1	BLOWER, ventilator
5	060503215	1	SPRING, plate
6	9932978548	1	SCREW, hex, M 10 x 140 -8.8
7	9999853094	6	PLATE, LOCKING, washer, VSF M 10
8	006213935	3	NUT, hex, M 10 -8
9	9933932028	1	SCREW, hex, M 12 x 35 -8.8
10	006501557	4	WASHER, SPRING, B12
11	061013448	1	PROTECTOR,
12	060526406	1	MOTOR, diesel, OM 441 - A
13	061013480	1	RETAINER,
14	060503336	2	SCREW, cheese-head, M 14 x 1, 5 x 30 -10.9
15	9961920117	2	WASHER, SPRING, B14
16	9933932108	2	SCREW, hex, M 12 x 40 -8.8
17	006214140	2	NUT, hex, M 12 -8
18	060503352	1	HOSE, PSI 113 x 1600 AFL B20
19	9970909194	2	GASKET, A 26 x 31-Cu
20	060503377	1	JACK SCREW, banjo, 22
21	003792994	1	VANEUM GAUGE, PLUG screw, XROV-15-L
22	060504788	11	CLAMP, double, LNG 3 14/14 PA
23	060503385	2	HOSE, PSI 108 x 950 BB
24	9946927540	6	JACK SCREW, banjo, 10
25	9907908392	10	GASKET, 14 x 20 - CU
26	9946936445	3	VANEUM GAUGE, PLUG screw, A-M 14 x 1.5
27	061013737	1	LINE, WATER cooling
28	061013745	2	FITTING, HOSE connecting
29	061013753	1	PIPE,
30	003792777	2	CLAMP, hose, AL 32-50
31	9908952610	4	CLAMP, hose, AL 16-27
32	9912957112	1	VANEUM GAUGE, PLUG closing
33	9970909844	1	GASKET, A 18 x 22 -CU
34	060503457	1	ADAPTER, screwing
35	061014110	1	FITTING,
36	061014176	1	LEVER,
37	061014207	1	SUPPORT,
38	061014215	1	SHIN, PLATE fish
39	061014223	1	UNION, PLATE fish
40	060503465	7	SCREW, hex, M 12 x 1,5 x 20 -8.8
41	9933959987	5	SCREW, hex, M 6 x 35 -8.8
42	9961919927	10	WASHER, SPRING, B 6
43	4260693600	1	GUIDE,
44	006213734	18	NUT, hex, M 6 -8
45	061014231	1	LEVER,

527 CASE IH COMBINE (1/98-12/98)

187 ENGINE, 199 KW

Ref	Part Number	Qty	Description
46	061014248	1	BRACKET,
47	061014256	1	HOOK, capstan
48	061021021	1	MAGNET, brake
49	006338385	2	SCREW, hex, M 6 x 16 -8.8
50	9999853100	2	PLATE, LOCKING, washer, VSF M 6
51	9019878654	8	STRAP, CABLE, band
52	061014280	1	BLOCK, shim
53	004023015	1	JOINT, angular, AS 10
54	9952898608	1	NUT, CAP screwed, M 12 L
55	003432554	1	FITTING, L-screwing
56	003609111	1	ELBOW, W-screwing
57	9973883010	1	SPRING, COMPRESSION, B 1, 8 x 11 x 17.5
58	9960962063	1	WASHER, 5.5
59	9933958471	2	SCREW, hex, M 5 x 14 -8.8
60	9961919902	2	WASHER, SPRING, B 5
61	006213478	4	NUT, hex, M 5 -8
62	9933929065	1	SCREW, hex, M 10 x 20 -8.8
63	9961920004	1	WASHER, SPRING, B 10
64	061020752	1	ANCHOR, angle
65	061020744	1	UNION, PLATE fish
66	061020760	1	SUPPORT,
67	9933929450	2	SCREW, hex, M 6 x 30 -8.8
68	9930977163	2	SCREW, hex, M 6 x 20 -8.8
70	060210638	1	TRAP, WATER, fuel
71	060508943	1	HOSE,
72	060508951	1	HOSE,
73	9908951730	1	HOSE,
74	060532943	1	MOTOR, STARTER, 24V
75	060509501	1	FILTER, ENGINE OIL,
76	060509487	2	FILTER, FUEL, 2 x 1L lose
77	060517253	1	BELT, V
78	060517261	1	BELTS, SET OF 2, V
79	9970908352	5	GASKET,
80	9933931180	2	SCREW, hex, M 10 x 35 -8.8
81	060533198	1	COVER,
82	060533204	1	FILTER CARTRIDGE,

190 COOLING SYSTEM

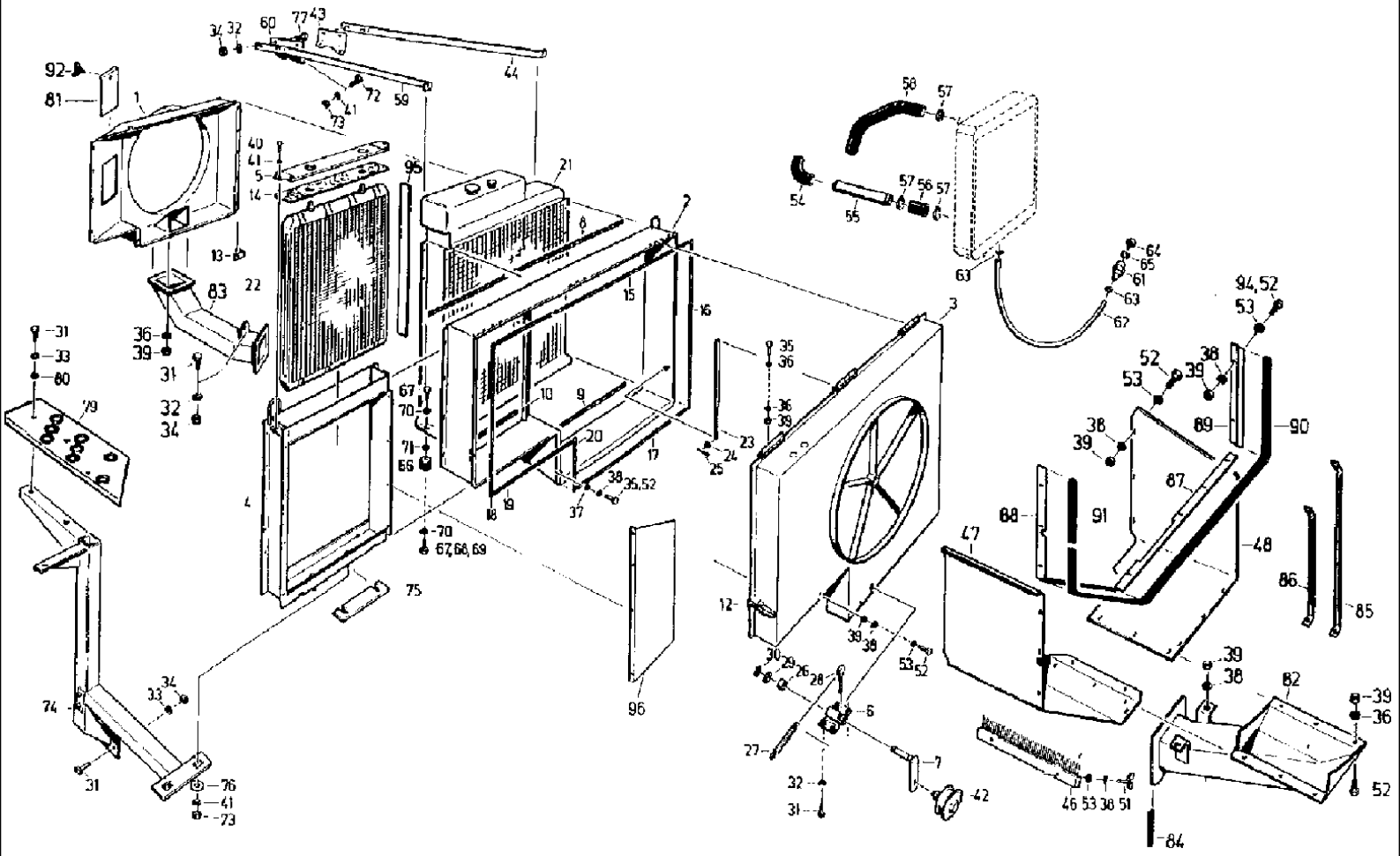

527 CASE IH COMBINE (1/98-12/98)

190 COOLING SYSTEM

Ref	Part Number	Qty	Description
1	061029535	1	HOOD, suction
2	061014561	1	FRAME,
3	061014633	1	HOUSING,
4	061014795	1	FRAME,
5	061014842	1	CLAMP, upper part
6	4270722373	1	BEARING,
7	4270722381	1	LEVER, ARM tensioning
8	061016522	1	STRIP, SEALING,
9	061016530	1	STRIP, SEALING,
10	061016547	1	STRIP, SEALING,
12	4270722316	3	DRAW HOOK, tow
13	061014867	1	ANGLE BAR,
14	061014875	2	PAD, washer
15	061014883	2	STRIP, SEALING,
16	061014891	1	STRIP, SEALING,
17	061014906	1	STRIP, SEALING,
18	061014914	1	STRIP, SEALING,
19	061014922	1	STRIP, SEALING,
20	061014930	1	STRIP, SEALING,
21	060503578	1	RADIATOR,
22	060503586	1	COOLER, OIL,
23	060503625	2	CYLINDER, GAS, spring
24	9960921633	4	WASHER, A 8.4
25	9963949377	4	PIN, SPLIT (COTTER), 2 x 20
26	4240030193	2	BUSHING,
27	9974976617	1	SPRING, TENSION, B 2.8 x 25 x 40 Aa1
28	9953989466	1	SCREW, eye, AM 6 x 30
29	003792133	1	SHIM, precision, 17 x 24 x 1.5
30	9964917143	1	CIRCLIP, 16 x 1
31	9933930001	18	SCREW, hex, M 8 x 20 -8.8
32	9999853117	12	PLATE, LOCKING, VSF M8
33	9961920061	7	WASHER, SPRING, B 8
34	006213830	12	NUT, hex, M 8 -8
35	9933958584	33	SCREW, hex, M 6 x 18 -8.8
36	9999853100	18	PLATE, LOCKING, washer, VSF M6
37	006510228	31	WASHER, B 6.4
38	9961919927	47	WASHER, SPRING, B 6
39	006213734	44	NUT, hex, M 6 -8
40	9933931180	2	SCREW, hex, M 10 x 16 -8.8
41	9961920004	6	WASHER, SPRING, B 10
42	4260711661	1	TIGHTENER SHEAVE, PULLEY tension
43	061015538	1	ANGLE BAR,
44	061015521	1	STAY, strud
46	4270723903	1	FLUID, CLEANER, brush
47	061026268	1	SHROUD, plate f

527 CASE IH COMBINE (1/98-12/98)

190 COOLING SYSTEM

Ref	Part Number	Qty	Description
48	061026276	1	SHROUD, plate g
51	003785038	2	THUMB SCREW, wing, M 6 x 12
52	9933929651	21	SCREW, hex, M 6 x 14 -8.8
53	006510927	15	WASHER, A 6.4
54	061013376	1	HOSE, LARGE, bow
55	061013577	1	TUBE, intermediate
56	061013384	1	FITTING, hose
57	060503184	6	CLAMP, hose, AS 70-90
58	061013392	1	PIPE, RETURN,
59	061013407	1	STAY, strud
60	061013415	1	ANGLE BAR,
61	4260693192	1	PLUG, pipe
62	4270721356	1	HOSE,
63	003785118	2	CLAMP, hose, AL 23-35
64	9946936621	1	VANEUM GAUGE, PLUG screw, M 16 x 1,5 -5.8
65	9970908505	1	GASKET, A 16 x 20
66	9972881493	4	DAMPER, HITCH, SPRING rubber
67	9933930887		SCREW, hex, n.B., M 10 x 16 -8.8
68	9933929065		SCREW, hex, n.B., M 10 x 20 -8.8
69	006343880		SCREW, hex, n.B., M 10 x 22 -8.8
70	9999853094	8	PLATE, LOCKING, washer, VSF M10
71	9964962486		WASHER, n.B., B 10.5
72	9933931228	4	SCREW, hex, M 10 x 40 -8.8
73	006213935	6	NUT, hex, M 10 -8
74	061014143	1	HOLDER, trestle
75	061014168		BLOCK, shim n.B.
76	9965962202	2	WASHER, 11 x 50 x 6
77	9933929173	1	SCREW, hex, M 8 x 25 -8.8
79	061016780	1	STEP,
80	9964962783	3	WASHER, A 8.4
81	060180438	1	SPOOL, slide
82	061026188	1	INTAKE ASSY, exhauster
83	061026018	1	FRAME, elevator
84	061026307	8	STRIP, SEALING, packing
85	061026284	1	STAY, strud
86	061026292	1	STAY, strud
87	061026557	1	RAIL,
88	061026565	1	RAIL,
89	061026573	1	RAIL,
90	061026581	1	STRIP, SEALING, packing
91	061026598	1	STRIP, SEALING, packing
92	006026836	1	SCREW, thumb, M 8 x 10
93	006340781	1	SCREW, hex, M 8 x 16 -8.8
94	006338633	1	SCREW, hex, M 6 x 20 -8.8
95	061026934	2	STRIP, SEALING, packing

Ref	Part Number	Qty	Description
96	061029318	1	NO DESCRIPTION, baffle

193 ENGINE OUTPUT MEMBER

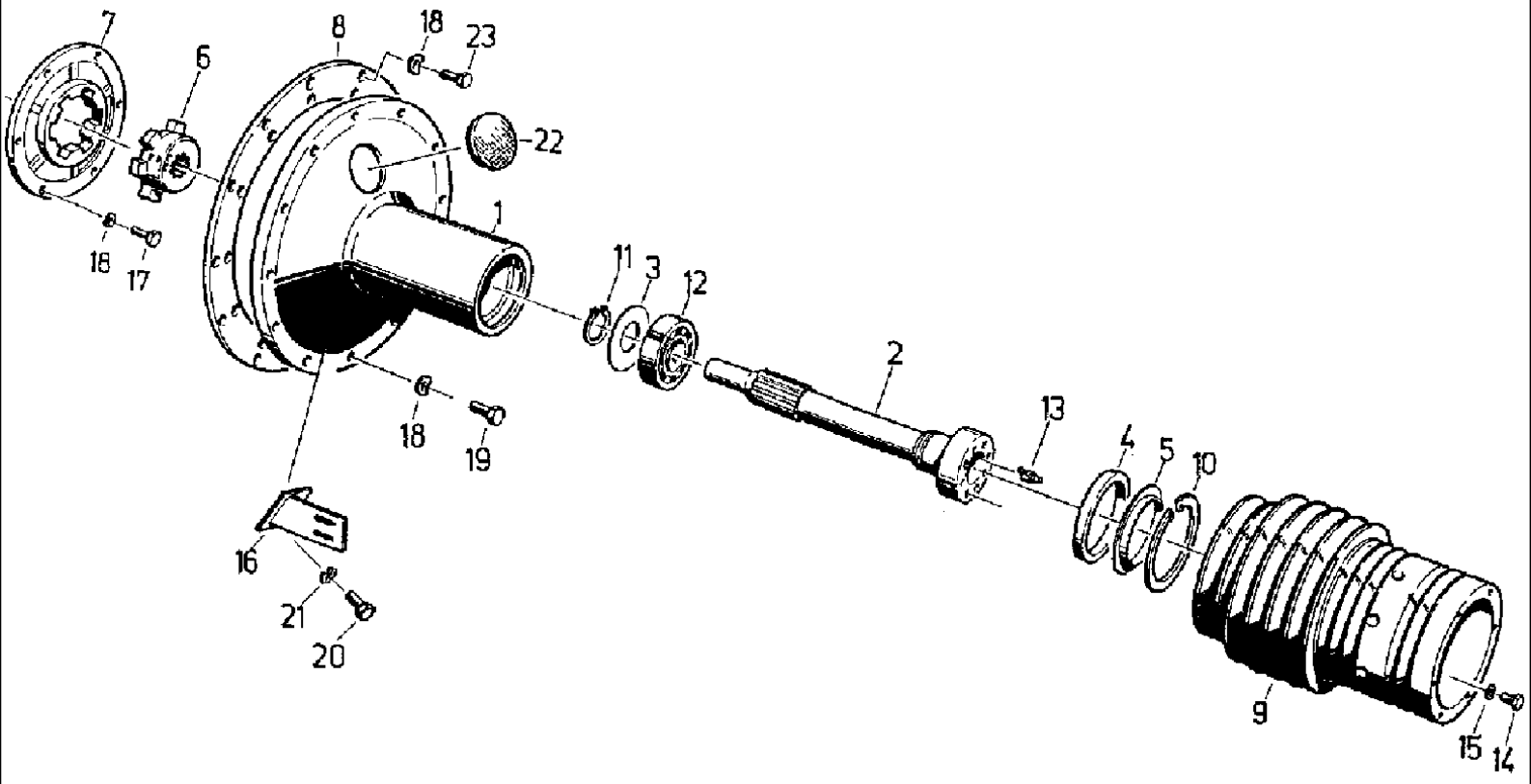

527 CASE IH COMBINE (1/98-12/98)

193 ENGINE OUTPUT MEMBER

Ref	Part Number	Qty	Description
1	060141497	1	BELL HOUSING,
2	061014955	1	SHAFT, flanged
3	020939457	1	SEAL WASHER,
4	020939465	1	BUSHING,
5	4221611576	1	COVER,
6	060503633	1	GEAR, WHEEL, STAR hub, ke
7	060503096	1	COUPLING, FLEXIBLE, ELEMENT elastic
8	061029873	1	SPACER, RING, intermediate
9	060503096	1	COUPLING, FLEXIBLE, pulley
10	9964917947	1	CIRCLIP, 130 x 4
11	9964917344	1	CIRCLIP, 60 x 2
12	003792760	1	BEARING, ROLLER self-aligning, 22212
13	9920925515	1	NIPPLE, LUBE, BM 8 x 1
14	9933932028	8	SCREW, hex, M 12 x 35 -8.8
15	006501557	8	WASHER, SPRING, B 12
16	061013497	1	RETAINER,
17	9933931123	8	SCREW, hex, M 10 x 30 -8.8
18	9961920004	32	WASHER, SPRING, B 10
19	003798644	12	SCREW, hex, M 10 x 25 -8.8
20	006340781	2	SCREW, hex, M 8x 16 -8.8
21	9999853117	2	PLATE, LOCKING, washer, VSF M 8
22	4240033942	1	COVER,
23	9933931180	12	SCREW, hex, M 10 x 35 -8.8

194 EXHAUST SYSTEM

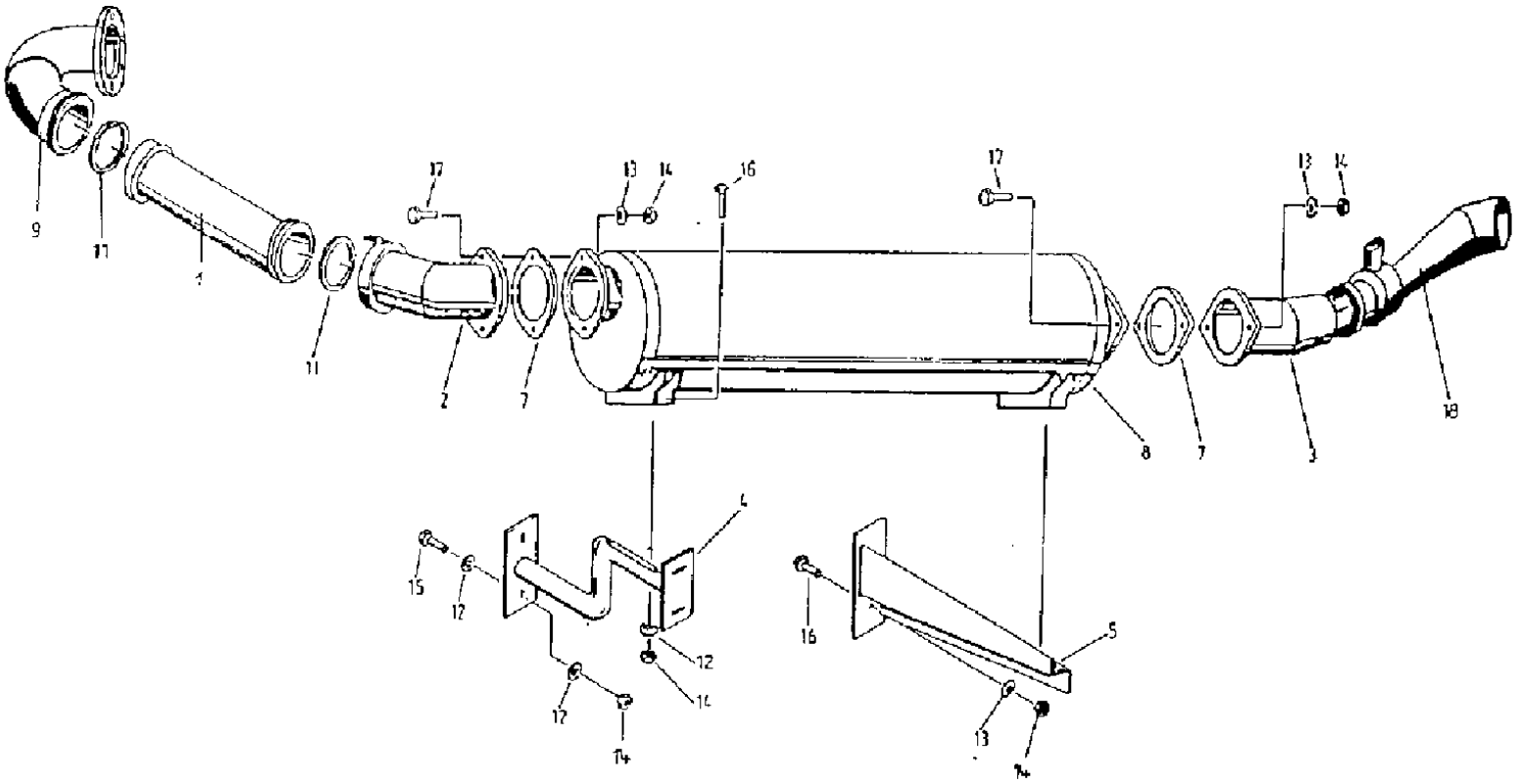

527 CASE IH COMBINE (1/98-12/98)

194 EXHAUST SYSTEM

Ref	Part Number	Qty	Description
1	061015064	1	UNION, PIPE connecting
2	061015080	1	PIN, ELECT TERMINAL, MEMBER angular
3	061015111	1	FITTING, PIPE exhaust
4	4270718795	1	CARRIER, support
5	4260693545	1	CARRIER, support
7	4270718690	2	GASKET,
8	4270718682	1	MUFFLER,
9	061013761	1	FITTING,
11	003792174	2	BUSHING, LARGE, RING rectangular, 95 x 3
12	9999853166	8	PLATE, LOCKING, washer, VSF M10
13	9961920004	6	WASHER, SPRING, B 10
14	006213935	14	NUT, hex, M 10 -8
15	9933931123	2	SCREW, hex, M 10 x 30 -8.8
16	9933929065	6	SCREW, hex, M 10 x 20 -8.8
17	9933931180	4	SCREW, hex, M 10 x 35 -8.8
18	061024514	1	KNOCKER, ejector

195 AIR CLEANER

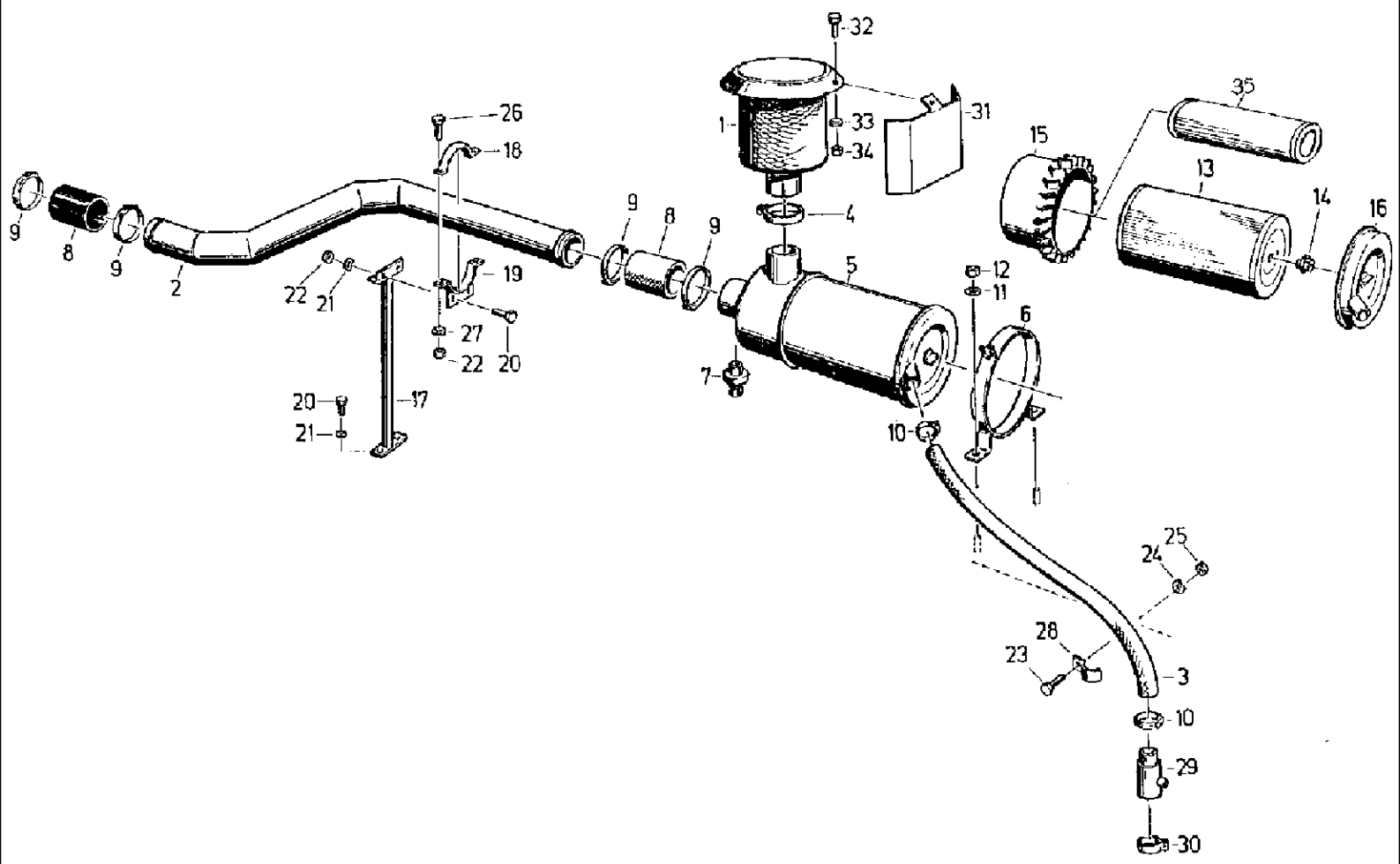

527 CASE IH COMBINE (1/98-12/98)

195 AIR CLEANER

Ref	Part Number	Qty	Description
1	061014963	1	FILTER, HEAD intake
2	061014996	1	PIPE ASSY., intake
3	061015056	1	HOSE, ejector
4	060503666	1	CLAMP, pipe
5	060533116	1	AIR CLEANER, dry-type
6	060503658	2	RETAINER,
7	003792808	1	SWITCH, maintenance
8	061015048	2	SLEEVE, TRANSMISSION,
9	060503682	4	CLAMP, hose, AS 130 - 150
10	9908951097	2	CLAMP, hose, AL 40 - 60
11	9999853125	4	PLATE, LOCKING, washer, VSF M12
12	006214140	4	NUT, hex, M 12 -8
13	060503834	1	CARTRIDGE, micro-top
14	060150168	1	NUT, collar
15	060503842	1	LINE, deflector
16	060503850	1	BOTTOM, floor
17	4270719320	1	SUPPORT,
18	4270719281	1	BOW,
19	4270719345	1	BAIL, BOW fastening
20	006340781	4	SCREW, hex, M 8 x 16 -8.8
21	9999853117	4	PLATE, LOCKING, washer, VSF M8
22	006213830	4	NUT, hex, M 8 -8
23	9933929065	1	SCREW, hex, M 10 x 20 -8.8
24	9961920004	3	WASHER, SPRING, B 10
25	006213935	3	NUT, hex, M 10 -8
26	9933930001	2	SCREW, hex, M 8 x 20 -8.8
27	9961920004	2	WASHER, SPRING, B 8
28	060503674	3	CLAMP, pipe, 46
29	060180526	1	SUPPORT,
30	060508340	1	CLAMP, pipe, G1-45 x 20
31	061026942	1	DEFLECTOR, rebuff
32	9933929200	1	SCREW, hex, M 6 x 12 -8.8
33	9961919927	3	WASHER, SPRING, B6
34	006213734	3	NUT, hex, M6 -8
35	060533124	1	AIR CLEANER, ELEMENT secondary

527 CASE IH COMBINE (1/98-12/98)

196 ENGINE MOUNT

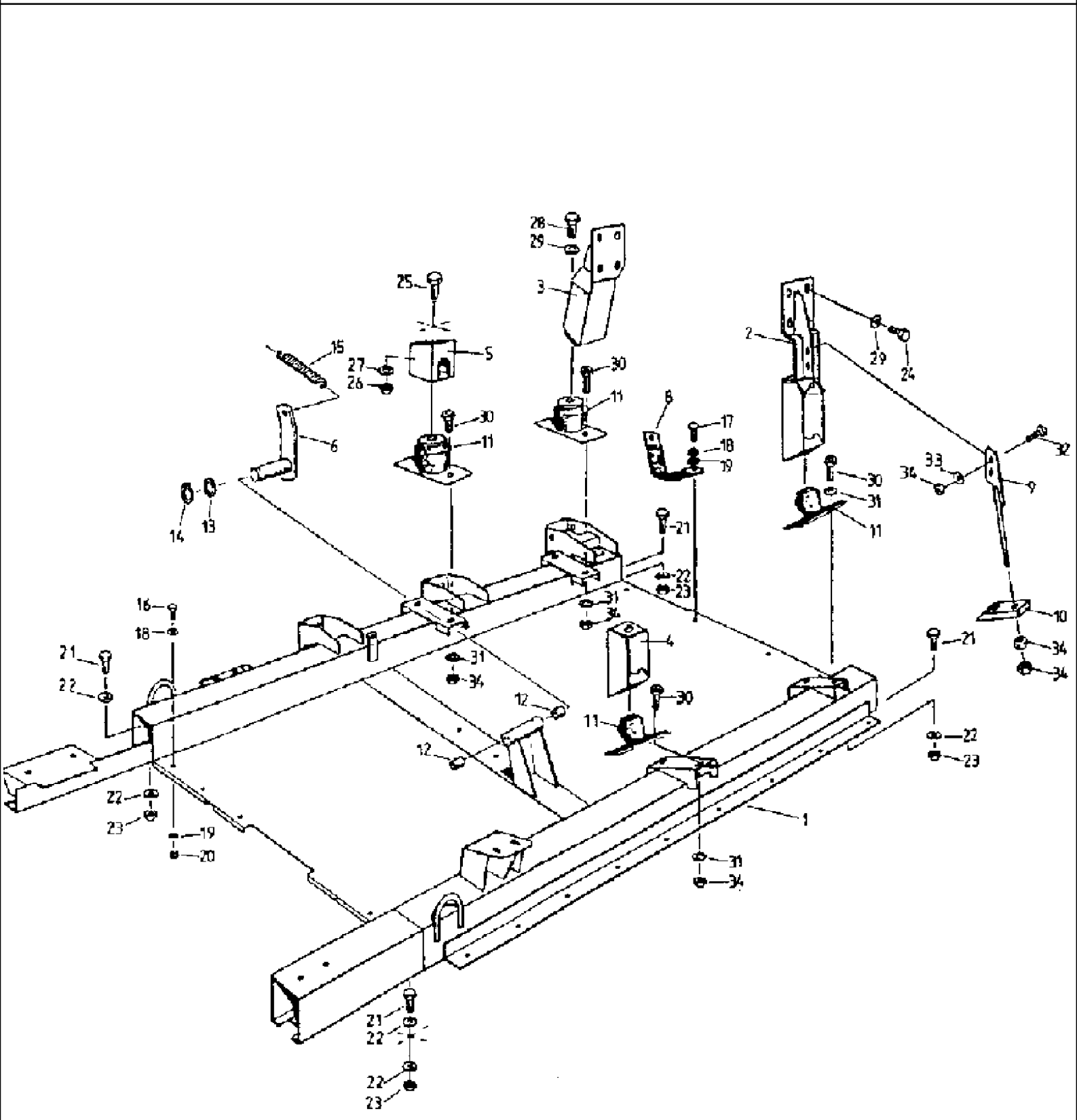

527 CASE IH COMBINE (1/98-12/98)

196 ENGINE MOUNT

Ref	Part Number	Qty	Description
1	061013134	1	CROSSBAR, BRACKET engine
2	061013183	1	FASTENER, MOUNT engine, f
3	061013191	1	FASTENER, MOUNT engine, f
4	061013310	1	FASTENER, MOUNT engine, g
5	061013343	1	FASTENER, MOUNT engine, g
6	4270721210	1	LEVER, ARM tensioning
8	4221611488	1	CABLE, BATTERY (NEG), mass
9	061013464	1	STANCHION, BAR draw
10	061013472	1	PROTECTION PLATE,
11	4240033950	4	DAMPER, HITCH, SPRING rubber
12	4240030193	2	BUSHING,
13	003792133	4	SHIM, precision, 17 x 24 x 1.5
14	9964917143	1	CIRCLIP, 16 x 1
15	9974976617	1	SPRING, TENSION, B 2, 8 x 25 x 40 Aa
16	006340781	24	SCREW, hex, M 8 x 16 -8.8
17	9933930001	1	SCREW, hex, M 8 x 20 -8.8
18	9964962783	25	WASHER, B 8.4
19	9961920061	25	WASHER, SPRING, B 8
20	006213830	6	NUT, hex, M 8 -8
21	006346666	4	SCREW, hex, M 12 x 30 -8.8
22	9999853125	6	PLATE, LOCKING, washer, VSF M 12
23	006214140	4	NUT, hex, M 12 -8
24	9933932911	8	SCREW, hex, M16 x 30 -8.8
25	9935961328	2	SCREW, hex, M 20 x 1,5 x 40 -8.8
26	9950896946	2	NUT, hex, M 20 x 1.5 -8
27	9961924563	2	DISC, NOTCHED, LOCK toothed, J 21
28	9934959141	4	SCREW, hex, M 16 x 1, 5 x 30 -8.8
29	9999853133	12	PLATE, LOCKING, washer, VSF M 16
30	003794674	8	SCREW, cylinder, M 12 x 25 -8.8
31	003794682	8	PLATE, LOCKING, washer, VSF Z 12
32	006346666	2	SCREW, hex, M 12 x 30 -8.8
33	006501557	2	WASHER, SPRING, B 12
34	006214140	9	NUT, hex, M 12 -8
35	006213935	2	NUT, hex, M 10 -8
36	061029857	1	HOOK, cabstan
37	061029865	1	PLATE,

197 SEPARATOR DRUM DRIVE

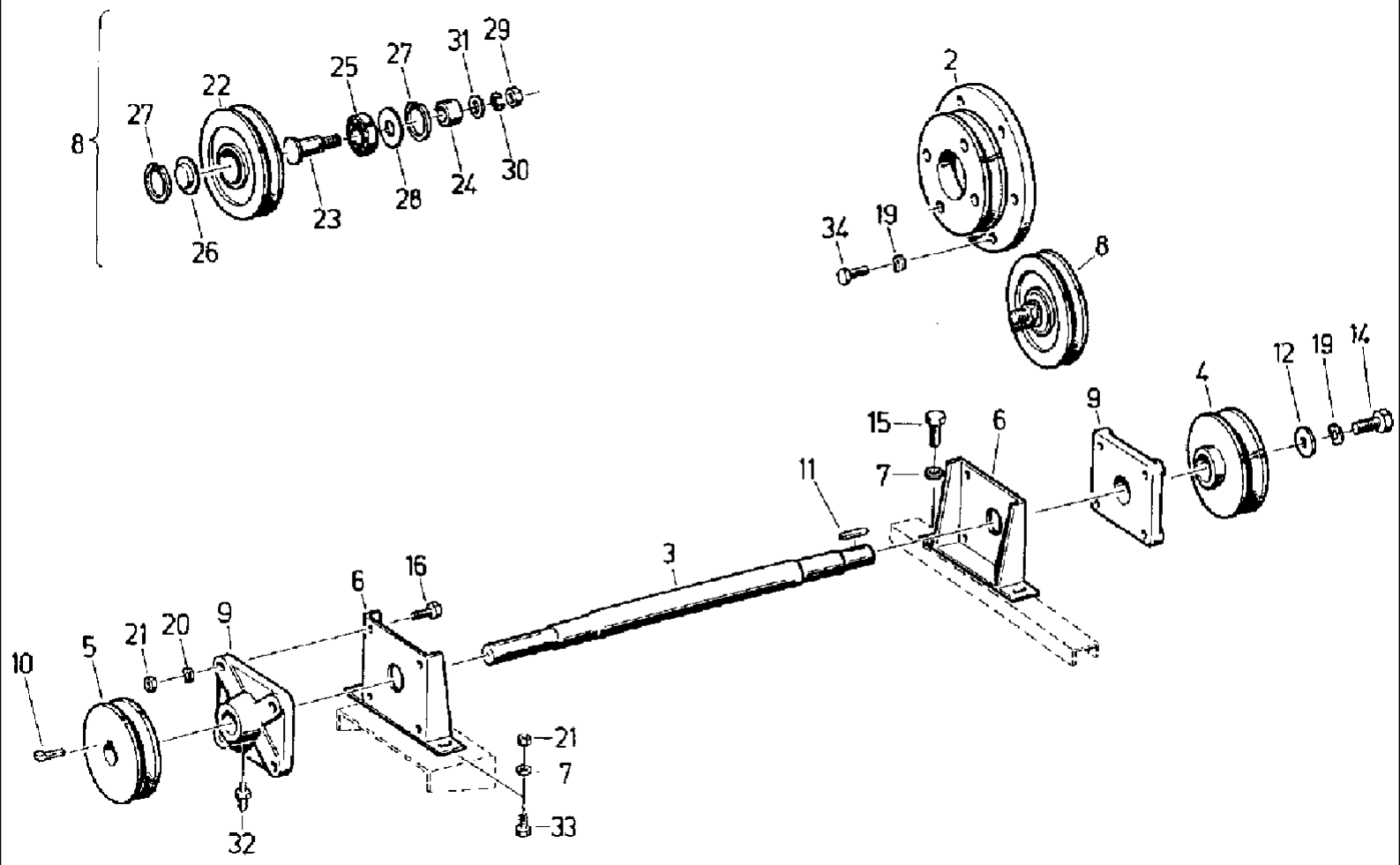

527 CASE IH COMBINE (1/98-12/98)

197 SEPARATOR DRUM DRIVE

Ref	Part Number	Qty	Description
2	061013456	1	ADAPTER, PLATE transitory
3	061013423	1	SHAFT,
4	4260693143	1	WASHER,
5	4260693151	1	WASHER,
6	4260700997	2	BEARING, bracket
7	9999853094	4	PLATE, LOCKING, washer, VSF M10
8	4270722277	1	TIGHTENER SHEAVE, PULLEY idler
9	9902888270	2	CARRIER, BEARING, flange, FGE 205
10	9965955252	1	KEY, gib-head, 6 x 6 x 32
11	9965955910	1	KEY, BUCKET TOOTHRT, fitting, A 6 x 6 x 20
12	9965964928	1	WASHER, 9 x 32 x 4
14	9933930001	1	SCREW, hex, M 8 x 20 -8.8
15	9933929065	2	SCREW, hex, M 10 x 20 -8.8
16	9933931123	8	SCREW, hex, M 10 x 30 -8.8
19	9961920061	4	WASHER, SPRING, B 8
20	9961920004	8	WASHER, SPRING, B 10
21	006213935	10	NUT, hex, M 10 -8
22	4270721348	1	ROLLER, SHIFTER, pulley
23	9949865572	1	PIN, LARGE, bolt, 65
24	4250125220	1	BUSHING,
25	9902890642	1	BEARING, ball, 6204 RS
26	9904868931	1	COVER, 47
27	9964917770	2	CIRCLIP, 47 x 1.6
28	4110085640	1	SEAL WASHER,
29	006214140	1	NUT, hex, M 12 -8
30	9961911204	1	WASHER, LOCK, spring, B 12
31	9960922031	1	WASHER, 14
32	003617056	2	NIPPLE, LUBE, AM 8 x 1
33	006344037	2	SCREW, hex, M 10 x 25 -8.8
34	9932932777	3	SCREW, hex, M 8 x 65 -8.8

198 ENGINE COWLING

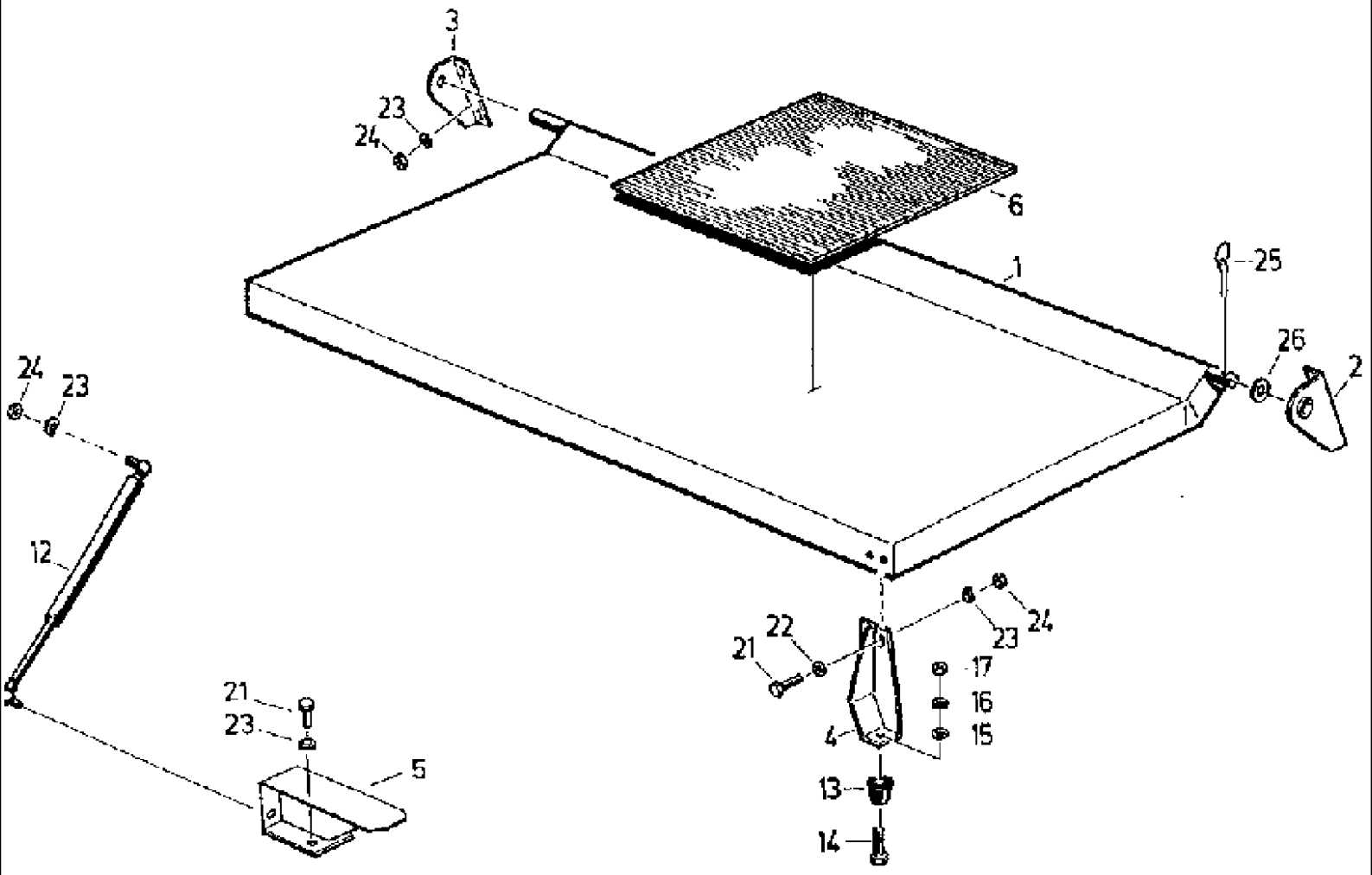

527 CASE IH COMBINE (1/98-12/98)

198 ENGINE COWLING

Ref	Part Number	Qty	Description
1	061019092	1	COVER, PROTECTIVE,
2	061020607	1	SHIN, strap, g
3	061020615	1	SHIN, strap, f
4	061020623	1	HOLDER, trestle
5	061029342	1	SUPPORT, holder
6	4240028094	1	MAT, rubber
12	060504763	1	CYLINDER, GAS, spring
13	9972879345	2	BUFFER, RUBBER, foot, 28
14	9938927766	2	SCREW, fillister-head, M 6 x 35-5.8
15	006510927	2	WASHER, A 6.4
16	9961919927	2	WASHER, SPRING, B 6
17	006213734	4	NUT, hex, M 6 -8
21	9933929715	5	SCREW, hex, M 8 x 18 -8.8
22	9960921633	2	WASHER, A 8.4
23	9961920061	11	WASHER, SPRING, B 8
24	006213830	8	NUT, hex, M 8 -8
25	060504771	1	PIN, LINCH, PLUG folding, 6 x 42
26	9960922876	1	WASHER, 26

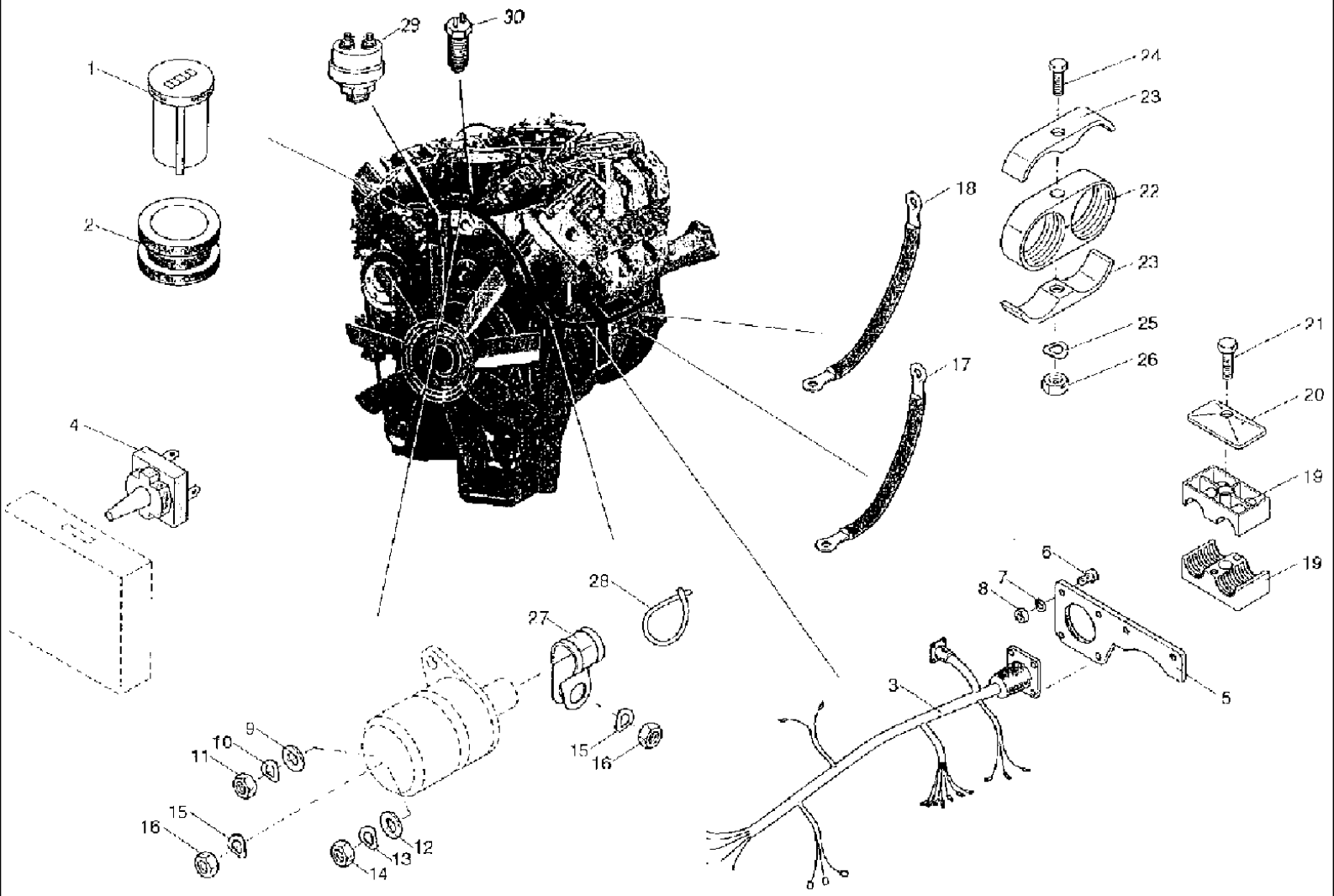
1
2
4
29
30
18
17
24
23
22
23
25
26
21
20
19
19
6
7
8
5
3
28
27
15
16
9
10
11
15
16
12
13
14

527 CASE IH COMBINE (1/98-12/98)

199 ELECTRICAL EQUIPMENT ENGINE

Ref	Part Number	Qty	Description
1	003785167	1	HOURMETER, engine
2	060506025	1	HOLDER, dampening
3	061068750	1	HARNESS, cable
4	060503297	1	SENSOR, LEVEL cooling water
5	061032981	1	RETAINER, pin, x 14.1
6	9936938578	4	SCREW, cheese-head, M 4 x 16 -5.8
7	9961919896	4	WASHER, SPRING, B 4
8	9950895496	4	NUT, hex, M 4 -8
9	9960921633	1	WASHER, A 8.4
10	9961920061	1	WASHER, SPRING, B 8
11	006213830	1	NUT, hex, M 8 -8
12	9960921457	1	WASHER, A 4.3
13	9961919896	1	WASHER, SPRING, B 4
14	9950895496	1	NUT, hex, M 4 -8
15	9961919902	2	WASHER, SPRING, B 5
16	006213478	2	NUT, hex, M 5 -8
17	4254126724	1	CABLE, LEAD ground
18	9922875301	1	SHIN, LINE connection
19	060505418	2	CIRCLIP, 214/14 PP
20	006646242	1	COVER, plate GD 2 D
21	060505426	1	SCREW, hex, AS-2D
22	060504788	2	CLAMP, double, LNG3 14/14 PP
23	060505387	4	COVER, plate, DPL 3
24	006341485	2	SCREW, hex, M 8 x 35 -8.8
25	9961920061	2	WASHER, SPRING, B 8
26	006213830	2	NUT, hex, M 8 -8
27	060503922	1	CLAMP, pipe, 1.25 x 15-W1
28	060503303	10	CABLE, band, PLT-2M-30
29	060520964	1	TRANSMITTER, PROBE oil pressure
30	060522056	1	SWITCH oil pressure

200 SEPARATING DRUM

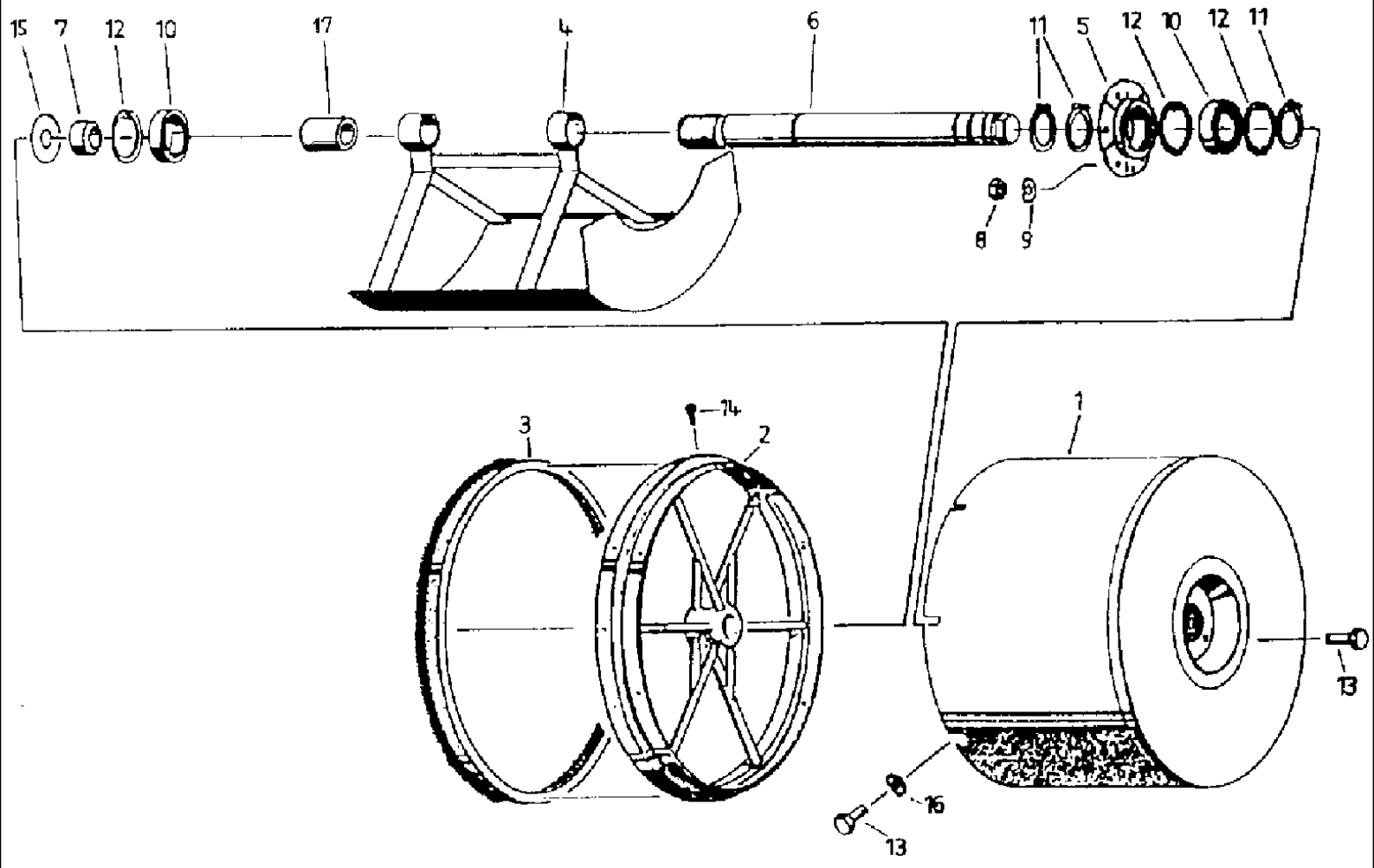

527 CASE IH COMBINE (1/98-12/98)

200 SEPARATING DRUM

Ref	Part Number	Qty	Description
1	4270718586	1	DRUM,
2	4260712742	1	SHAFT, DRIVE, ring
3	4260712750	1	BRUSH, sealing
4	4270718594	1	COVER, PROTECTIVE, drum
5	4260701040	1	HOUSING, BEARING,
6	4270718600	1	AXLE,
7	4260701065	1	PAD, WEAR, PIECE pressure
8	006323734	3	Hex, M 6 -8
9	9961919927	3	WASHER, SPRING, B 6
10	9902892837	2	BEARING, ball, 6005-2RS
11	9964917192	3	CIRCLIP, 25 x 1.2
12	9964917770	3	CIRCLIP, 47 x 1.6
13	9933929200	9	SCREW, hex, M 6 x 12 -8.8
14	9937984092	5	SCREW, sheet metal, B 2.9 x 9.5
15	9965920611		SHIM, precision n.B., 25 x 35 x 1
16	006510228	6	WASHER, B 6.4
17	060168788	1	LANDSIDE, feed

201 ENGINE, 197 KW

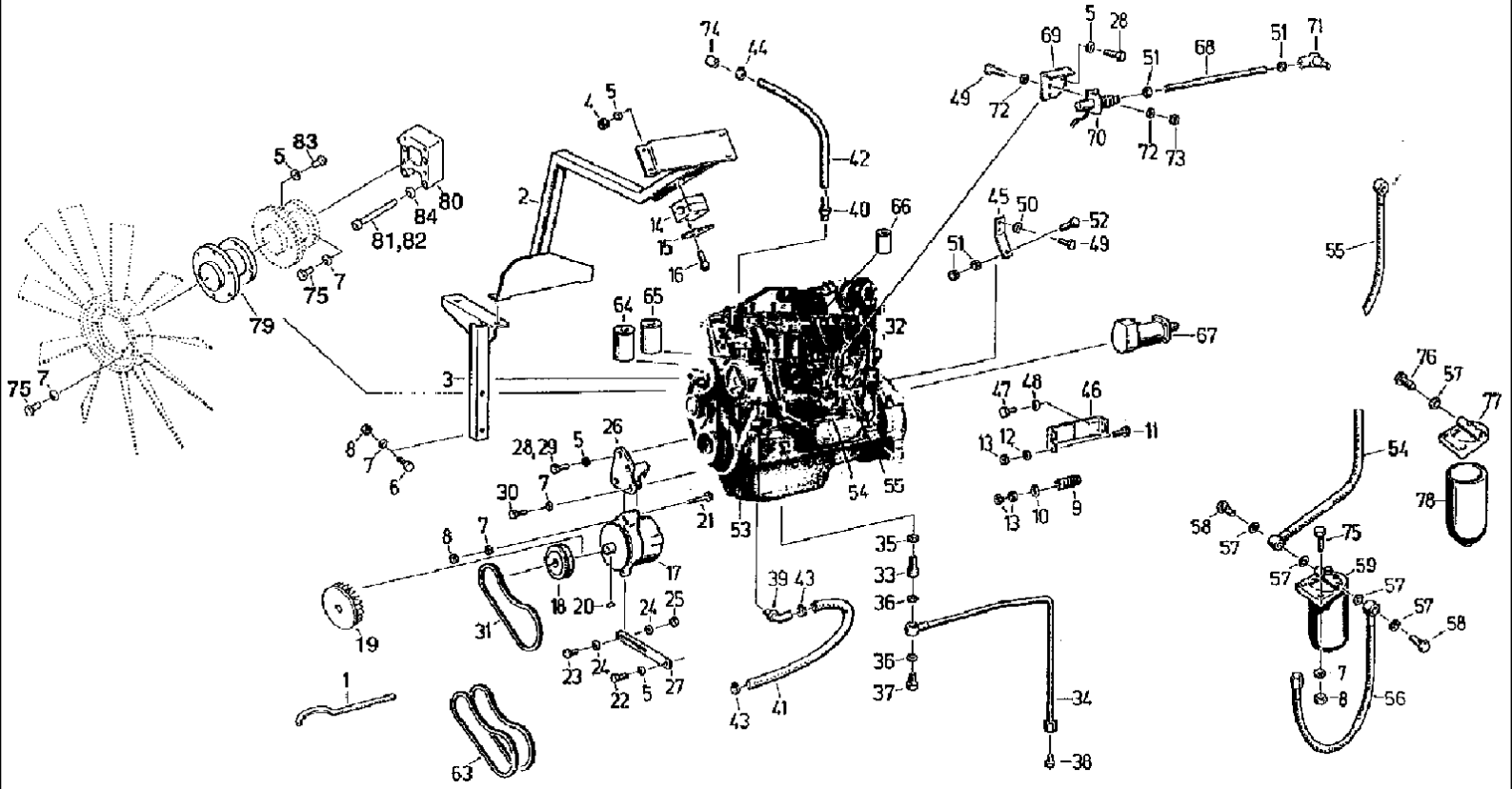

527 CASE IH COMBINE (1/98-12/98)

201 ENGINE, 197 KW

Ref	Part Number	Qty	Description
1	4270721758	1	TOOL, lever
2	061024957	1	CARRIER, support
3	4270721733	1	SUPPORT,
4	006213830	2	NUT, hex, M 8 -8
5	9999853117	11	PLATE, LOCKING, washer, VSF-M8
6	006344037	2	SCREW, hex, M 10 x 25 -8.8
7	9999853094	18	PLATE, LOCKING, washer, VSF M 10
8	006213935	5	NUT, hex, M 10 -8
9	060508935	1	SPRING, COMPRESSION,
10	9960962063	1	WASHER, 5.5
11	9933958471	2	SCREW, hex, M 5 x 14 -8.8
12	9961919902	2	WASHER, SPRING, B5
13	006213478	4	NUT, hex, M 5 -8
14	006646306	1	CIRCLIP, 218 PP
15	006646275	1	COVER, plate, DP 2
16	9933959987	2	SCREW, hex, M 6 x 35 -8.8
17	060503192	1	ALTERNATOR, DYNAMO three phase
18	061051277	1	GROOVED PULLEY, v-belt
19	9019635918	1	BLOWER, ventilator
20	060503215	1	SPRING, plate
21	9932930783	1	SCREW, hex, M10 x 110 -8.8
22	006341485	1	SCREW, hex, M 8 x 35 -8.8
23	9933932028	1	SCREW, hex, M 12 x 35 -8.8
24	9999853125	2	PLATE, LOCKING, washer, VSF M12
25	006214140	1	NUT, hex, M 12 -8
26	061024426	1	SUPPORT, holder
27	061024475	1	LEVER, ARM bending
28	9933929173	3	SCREW, hex, M 8 x 25 -8.8
29	006334131	1	SCREW, hex, M 8 x 45 -8.8
30	9931931262	1	SCREW, hex, M 10 x 45 -8.8
31	060506933	1	BELTS, SET OF 2, narrow V, 2 XPZ 1312
32	060526391	1	MOTOR, diesel
33	060142457	1	FITTING,
34	003784920	1	HOSE, PSI 110 x 2200 AFL B
35	003784986	1	GASKET, A 24 x 29-Cu
36	9970908513	2	GASKET, A 16x20-Cu
37	003784994	1	JACK SCREW, banjo, 12
38	003433450	1	VANEUM GAUGE, PLUG crew, XROV 12-L
39	061024844	1	ADAPTER, crewing
40	061024877	1	FITTING,
41	061013737	1	LINE, WATER cooling
42	061025090	1	FITTING, connecting
43	003792777	2	CLAMP, hose, AL32-50-W2-1
44	9908952610	2	CLAMP, hose, AL16-27-W2-1
45	061050067	1	LEVER,

527 CASE IH COMBINE (1/98-12/98)

201 ENGINE, 197 KW

Ref	Part Number	Qty	Description
46	061050083	1	SUPPORT,
47	9933929065	1	SCREW, hex, M 10 x 20 -8.8
48	9961920004	2	WASHER, SPRING, B10
49	9930977163	1	SCREW, hex, M 6 x 20 -8.8
50	9961919927	1	WASHER, SPRING, B6
51	006213734	3	NUT, hex, M 6 -8
52	4260693600	1	GUIDE,
53	061027767	1	FITTING, NOZZLE suction
54	060509181	1	HOSE,
55	060509198	1	HOSE,
56	9908951730	1	HOSE,
57	9970908353	5	GASKET,
58	9946927540	2	JACK SCREW, hollow, 10
59	060210638	1	TRAP, WATER, FILTER fuel
61	060504788	4	CLAMP, double
62	006267111	4	NUT, hex, M 6-8
63	060518004	1	BELTS, SET OF 2, V
64	060507493	1	FILTER, ENGINE OIL, filter (Hauptstrom)
65	060514138	1	FILTER, ENGINE OIL, filter (Nebenstrom)
66	060507485	2	FILTER, FUEL,
67	060520796	1	MOTOR, STARTER,
68	061050227	1	HOOK, BOLT through
69	061050235	1	BRACKET, console
70	061021021	1	MAGNET, stop
71	004023015	1	JOINT, angle
72	060150770	4	PLATE, LOCKING, washer, VSF B 6
73	006267111	2	NUT, hex, M 6 -8
74	061052702	1	COVER, PROTECTIVE, shield
75	9933931180	12	SCREW, hex, M 10 x 35 -8.8
76	9946936445	1	VANEUM GAUGE, locking, AM 14 x 1.5
77	060533198	1	COVER,
78	060533204	1	FILTER CARTRIDGE,
79	061065803	1	HUB,
80	061065764	1	PLATE, LARGE, intermediate
81	060533294	2	SCREW, cheese-head, M 10 x 130 -8.8
82	9937984621	2	SCREW, cheese-head, M 10 x 45 -8.8
83	06341717	4	SCREW, hex, M 8 x 45 -8.8
84	003794168	4	PLATE, LOCKING, washer, VSF Z 10

204 COOLING SYSTEM

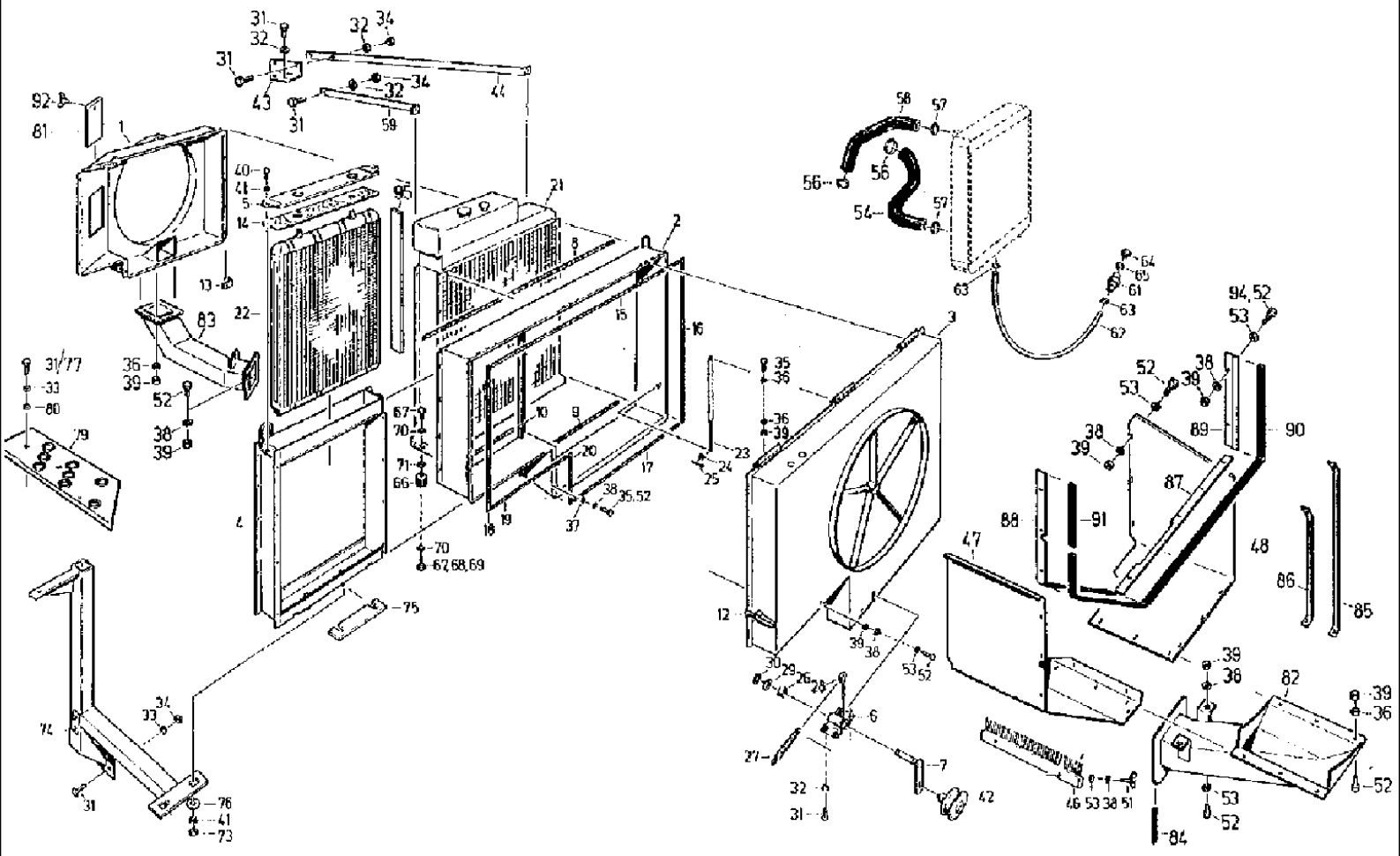

527 CASE IH COMBINE (1/98-12/98)

204 COOLING SYSTEM

Ref	Part Number	Qty	Description
1	061065908	1	HOOD, suction
2	061024081	1	FRAME,
3	061014633	1	HOUSING,
4	061014795	1	FRAME,
5	061014842	1	CLAMP, PART upper
6	4270722373	1	BEARING,
7	4270722381	1	LEVER, ARM tensioning
8	061016522	1	STRIP, SEALING,
9	061016530	1	STRIP, SEALING,
10	061016547	1	STRIP, SEALING,
12	4270722316	3	DRAW HOOK, tow
13	061014867	1	ANGLE BAR,
14	061014875	2	PAD, washer
15	061027670	2	STRIP, SEALING,
16	061014891	1	STRIP, SEALING,
17	061014906	1	STRIP, SEALING,
18	061014914	1	STRIP, SEALING,
19	061014922	1	STRIP, SEALING,
20	061014930	1	STRIP, SEALING,
21	060503578	1	RADIATOR,
22	060503586	1	COOLER, OIL, radiator
23	060503625	2	CYLINDER, GAS, spring
24	9960921633	4	WASHER, A 8.4
25	9963949377	4	PIN, SPLIT (COTTER), 2 x 20
26	4240030193	2	BUSHING,
27	9974976617	1	SPRING, TENSION, B 2, 8 x 25 x 40 Aa1
28	9953989466	1	SCREW, eye, AM 6 x 30
29	003792133	1	SHIM, precision, 17 x 24 x 1.5
30	9964917143	1	CIRCLIP, 16 x 1
31	9933930001	15	SCREW, hex, M 8 x 20 -8.8
32	9999853117	9	PLATE, LOCKING, washer, VSF M8
33	9961920061	8	WASHER, SPRING, B 8
34	006213830	7	NUT, hex, M 8 -8
35	9933958584	33	SCREW, hex, M 6 x 18 -8.8
36	9999853100	41	PLATE, LOCKING, VSF M6
37	006510228	31	WASHER, A 6.4
38	9961919927	20	WASHER, SPRING, B 6
39	006213734	36	NUT, hex, M 6 -8
40	9933931180	2	SCREW, hex, M 10 x 35 -8.8
41	9961920004	2	WASHER, SPRING, B 10
42	4260711661	1	TIGHTENER SHEAVE, PULLEY tension
43	061025170	1	ANGLE BAR,
44	061025187	1	STAY, strud
46	4270723903	1	FLUID, CLEANER, brush
47	061026268	1	SHROUD, plate, f

527 CASE IH COMBINE (1/98-12/98)

204 COOLING SYSTEM

Ref	Part Number	Qty	Description
48	061026276	1	SHROUD, plate, g
51	003785038	2	THUMB SCREW, wing, M 6 x 12
52	9933929651	9	SCREW, hex, M 6 x 14 -8.8
53	006510927	20	WASHER, A 6.4
54	061024395	1	PIPE, SUCTION, line
56	003785021	2	CLAMP, hose, AL 50-70
57	060503184	2	CLAMP, hose, AS 70-90
58	061024387	1	PIPE, RETURN,
59	061025162	1	STAY, strud
61	4260693192	1	PLUG, pipe
62	4270721356	1	HOSE,
63	003785118	2	CLAMP, hose, AL 23-35
64	9946936621	1	VANEUM GAUGE, PLUG screw, M 16 x 1,5 -5.8
65	9970908505	1	GASKET, A 16 x 20
66	9972881493	4	DAMPER, HITCH, SPRING rubber
67	9933930887		SCREW, hex n.B., M 10 x 16 -8.8
68	9933929065		SCREW, hex n.B., M 10 x 20 -8.8
69	006343880		SCREW, hex n.B., M 10 x 22 -8.8
70	9999853094	8	PLATE, LOCKING, washer, VSF M10
71	9964962486		WASHER, n.B., B 10.5
74	061024885	1	HOLDER, trestle
75	061014168		BLOCK, shim n.B.
76	9965962202	2	WASHER, 11 x 50 x 6
77	9933929173	2	SCREW, hex, M 8 x 25 -8.8
79	061016780	1	STEP,
80	9964962783	2	WASHER, A 8.4
81	060180438	1	SPOOL, slide
82	061026188	1	INTAKE ASSY, exhauster
83	061027478	1	FRAME, elevator
84	061026307	8	STRIP, SEALING, packing
85	061026284	1	STAY, strud
86	061026292	1	STAY, strud
87	061026557	1	RAIL,
88	061026565	1	RAIL,
89	061026573	1	RAIL,
90	061026581	1	STRIP, SEALING, packing
91	061026598	1	STRIP, SEALING, packing
92	006026836	1	SCREW, thumb, M 8 x 10
94	006338633	1	SCREW, hex, M 6 x 20 -8.8
95	061026934	2	STRIP, SEALING, packing

207 ENGINE OUTPUT MEMBER

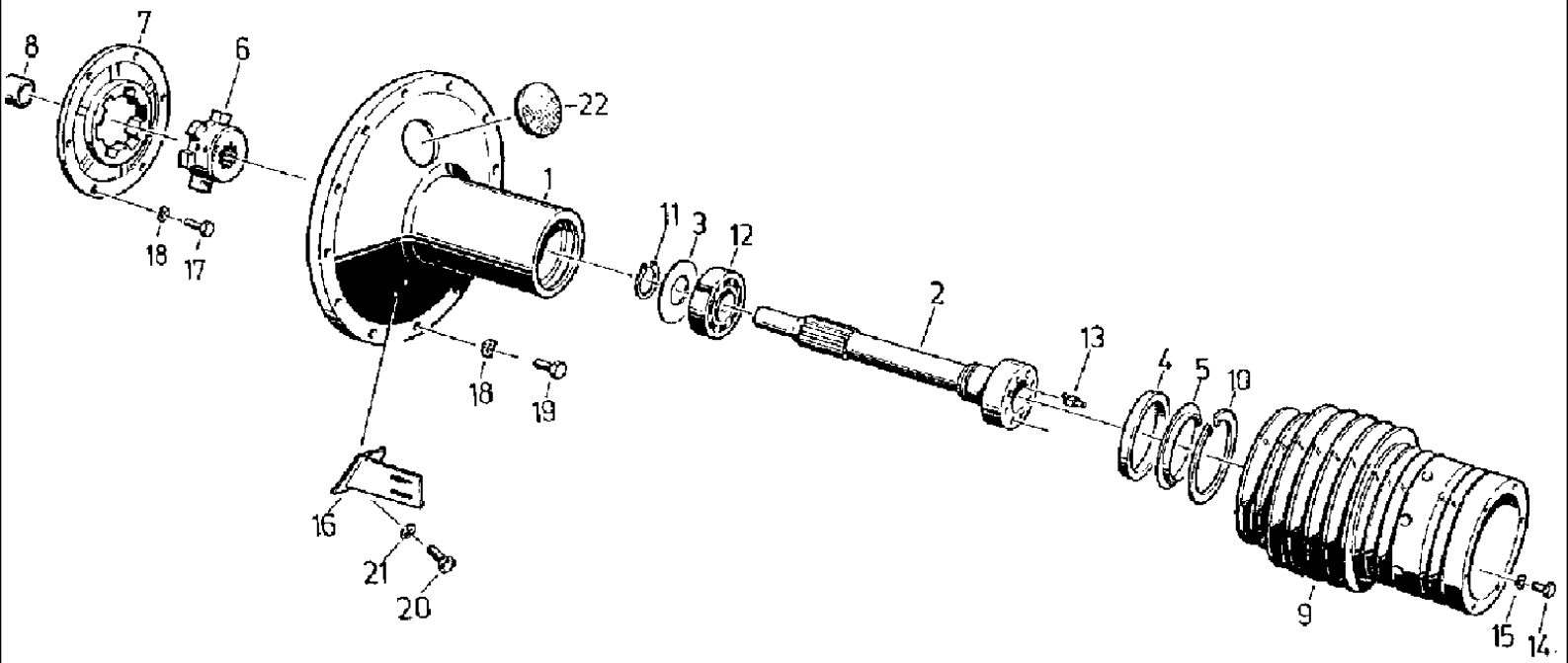

527 CASE IH COMBINE (1/98-12/98)

207 ENGINE OUTPUT MEMBER

Ref	Part Number	Qty	Description
1	060141497	1	BELL HOUSING,
2	061024008	1	SHAFT, flanged
3	020939457	1	SEAL WASHER,
4	020939465	1	BUSHING,
5	4221611576	1	COVER,
6	060503633	1	GEAR, WHEEL, hub star ke
7	060503096	1	COUPLING, FLEXIBLE,
8	060140898	1	BUSHING,
9	061013167	1	PULLEY,
10	9964917947	1	CIRCLIP, 130 x 4
11	9964917344	1	CIRCLIP, 60 x 2
12	003792760	1	BEARING, self-aligning roller, 22212
13	9920925515	1	NIPPLE, LUBE, BM 8 x 1
14	9933932028	8	SCREW, hex, M 12 x 35 -8.8
15	006501557	8	WASHER, SPRING, B 12
16	061013497	1	RETAINER, holder
17	060506306	8	SCREW, hex, 3/8"- 16 UNC x 32
18	9961920004	20	WASHER, SPRING, B 10
19	003798644	12	SCREW, hex, 3/8"- 16 UNC x 25
20	006340781	2	SCREW, hex, M 8 x 16 -8.8
21	9999853117	2	PLATE, LOCKING, washer, VSF M 8
22	4240033942	1	COVER,

208 EXHAUST SYSTEM

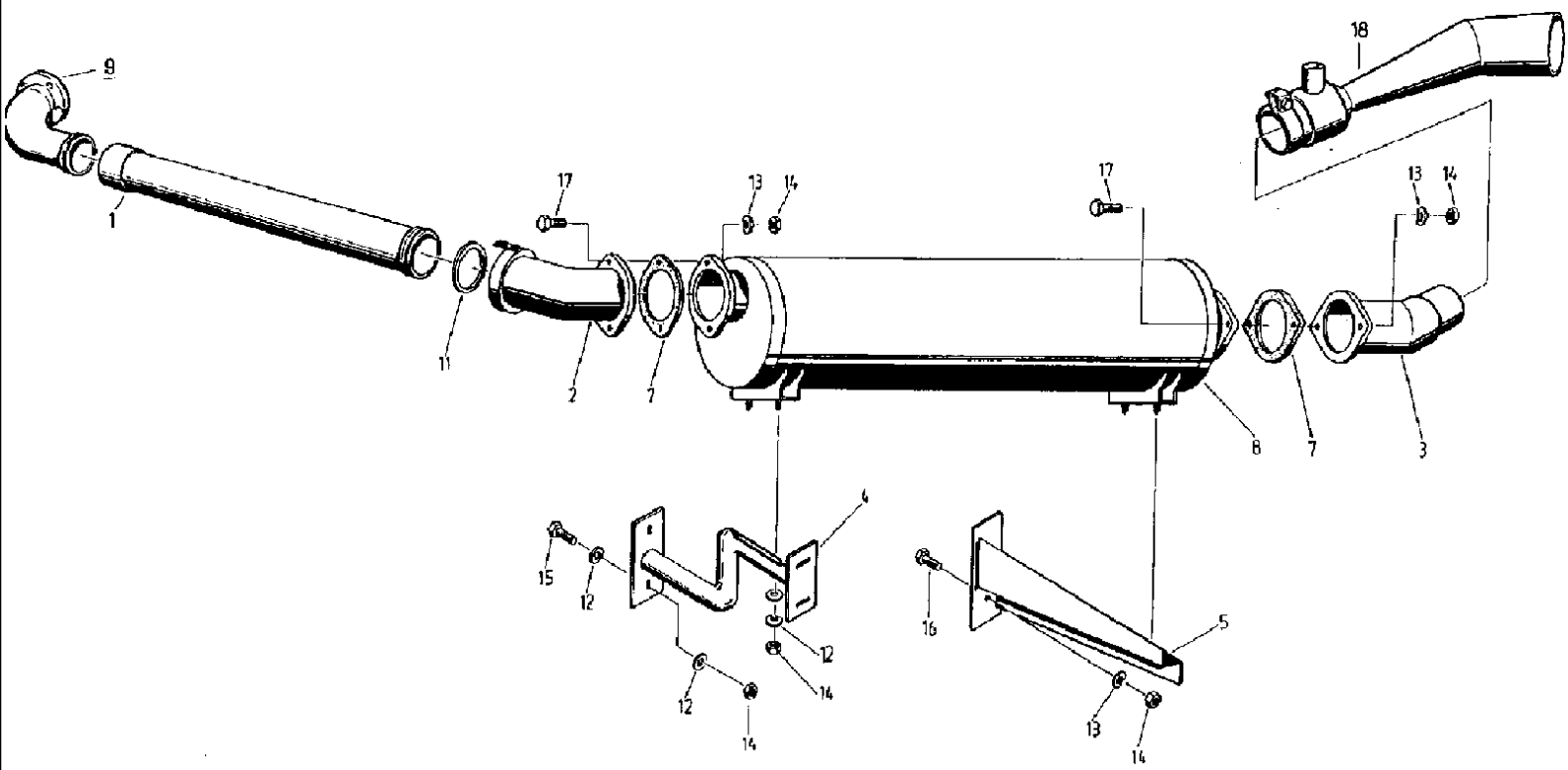

527 CASE IH COMBINE (1/98-12/98)

208 EXHAUST SYSTEM

Ref	Part Number	Qty	Description
1	061023851	1	UNION, PIPE connecting
2	061023868	1	PIN, ELECT TERMINAL, MEMBER angular
3	061015111	1	FITTING, PIPE exhaust
4	4270718795	1	CARRIER, support
5	4260693545	1	CARRIER, support
7	4270718690	2	GASKET,
8	4270718682	1	MUFFLER,
9	061024893	1	FITTING,
11	003792174	2	BUSHING, LARGE, RING rectangular, 95 x 3
12	9999853166	8	PLATE, LOCKING, washer, VSF B10
13	9961920004	6	WASHER, SPRING, B 10
14	006213935	14	NUT, hex, M 10 -8
15	9933931123	2	SCREW, hex, M 10 x 30 -8.8
16	9933929065	6	SCREW, hex, M 10 x 20 -8.8
17	9933931180	4	SCREW, hex, M 10 x 35 -8.8
18	061024514	1	KNOCKER, ejector

209 AIR CLEANER FILTRE A AIR

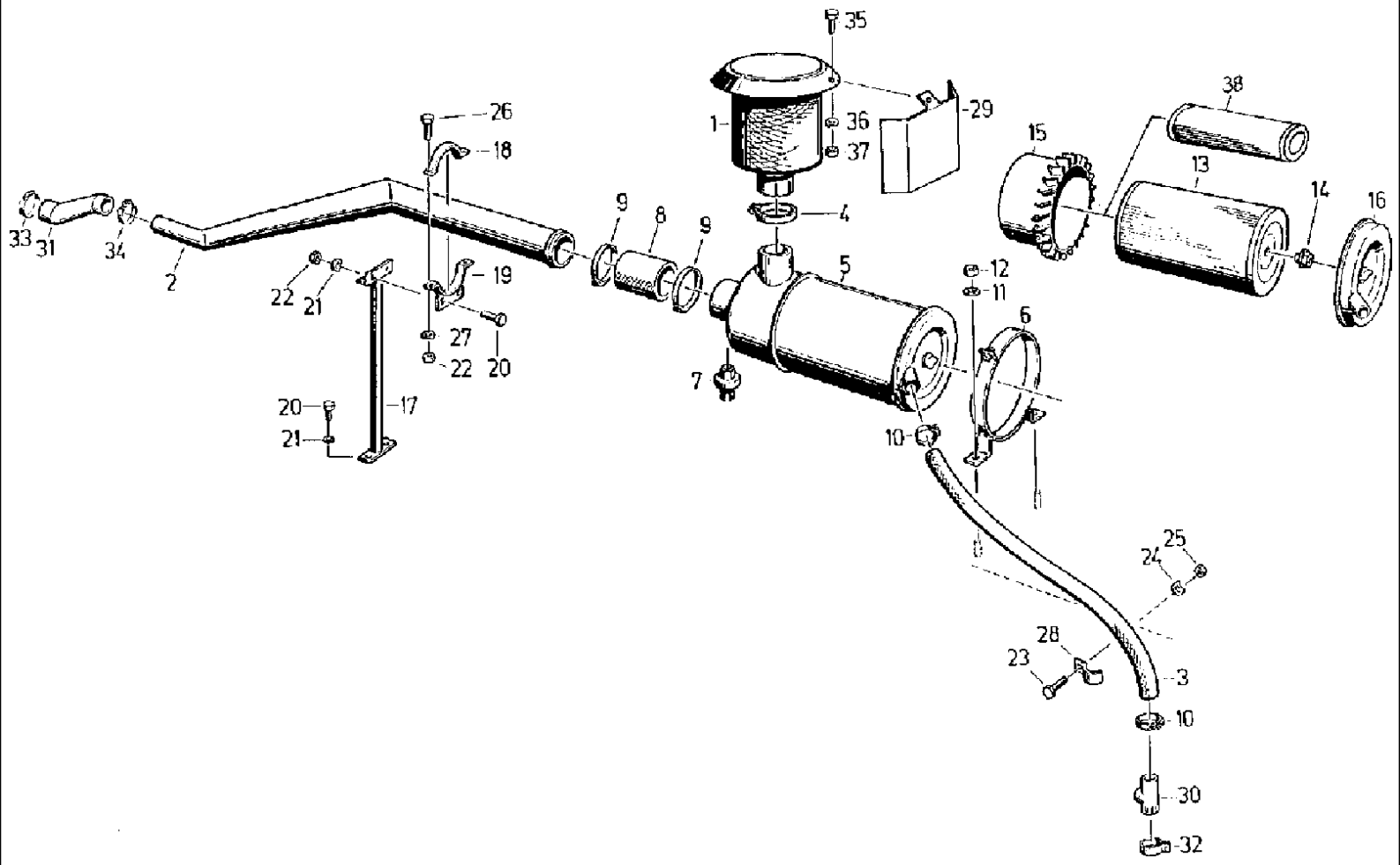

527 CASE IH COMBINE (1/98-12/98)

209 AIR CLEANER FILTRE A AIR

Ref	Part Number	Qty	Description
1	061014963	1	FILTER, HEAD intake
2	061023796	1	GRILLE ASSY, PIPE intake
3	061015056	1	HOSE, ejector
4	060503666	1	CLAMP, pipe
5	060533116	1	AIR CLEANER, dry-type
6	060503658	2	RETAINER,
7	003792808	1	SWITCH, maintenance
8	061015048	1	SLEEVE, TRANSMISSION,
9	060503682	2	CLAMP, hose, AS 130 - 150
10	9908951097	2	CLAMP, hose, AL 40 - 60
11	9999853125	4	PLATE, LOCKING, washer, VSF M12
12	006214140	4	NUT, hex, M 12 -8
13	060503834	1	CARTRIDGE, micro-top
14	060150168	1	NUT, collar
15	060503842	1	LINE, deflector
16	060503850	1	BOTTOM, floor
17	4270719320	1	SUPPORT,
18	4270719281	1	BOW,
19	4270719345	1	BAIL, BOW fastening
20	006340781	4	SCREW, hex, M 8 x 16 -8.8
21	9999853117	4	PLATE, LOCKING, washer, VSF M8
22	006213830	4	NUT, hex, M 8 -8
23	9933929065	1	SCREW, hex, M 10 x 20 -8.8
24	9961920004	3	WASHER, SPRING, B 10
25	006213935	3	NUT, hex, M 10 -8
26	9933930001	2	SCREW, hex, M 8 x 20 -8.8
27	9961920061	2	WASHER, SPRING, B 8
28	060503674	3	CLAMP, pipe, 46
29	061026942	1	DEFLECTOR, rebuff
30	060180526	1	SUPPORT, connection
31	061023802	1	RUBBER, sleeve
32	060508340	1	CLAMP, pipe, G1-45 x 20
33	9910953207	1	CLAMP, hose, AL 70-90
34	003782244	1	CLAMP, hose, Al 110-130
35	9933929200	1	SCREW, hex, M 6 x 12 -8.8
36	9961919927	3	WASHER, SPRING, B6
37	006213734	3	NUT, hex, M6 -8
38	060533124	1	AIR CLEANER, ELEMENT secondary

527 CASE IH COMBINE (1/98-12/98)

210 ENGINE MOUNT

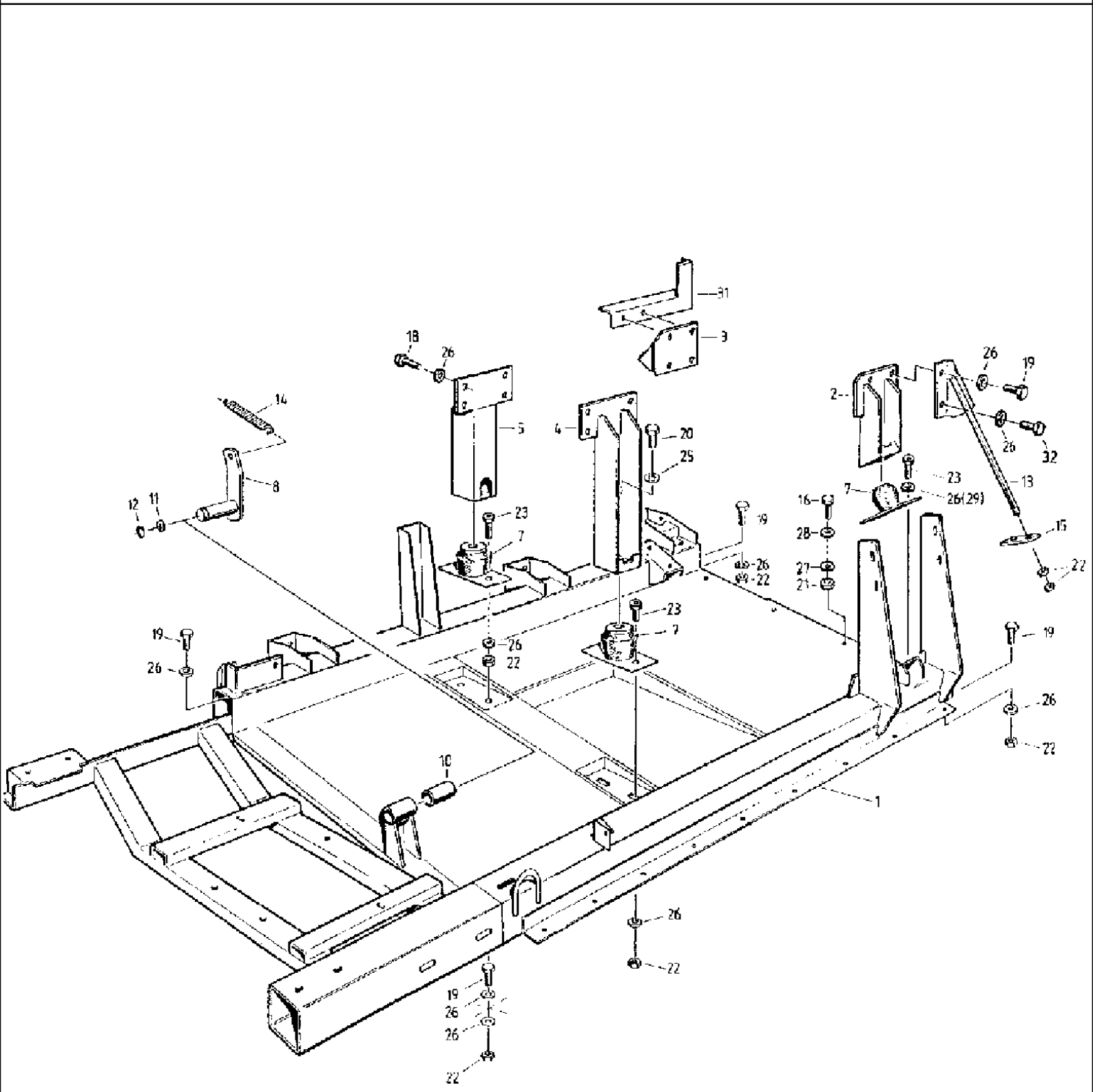

527 CASE IH COMBINE (1/98-12/98)

210 ENGINE MOUNT

Ref	Part Number	Qty	Description
1	061024200	1	CROSSBAR, BRACKET engine
2	060142600	1	FASTENER, MOUNT engine
3	060142633	1	FASTENER, MOUNT engine
4	060142658	1	FASTENER, MOUNT engine
5	060145388	1	FASTENER, MOUNT engine
7	4240033950	4	DAMPER, HITCH, SPRING rubber
8	4270721210	1	LEVER, ARM tensioning
10	4240030193	2	BUSHING,
11	003792133	7	SHIM, precision, 17 x 24 x 1.5
12	9964917143	1	CIRCLIP, 16 x 1
13	060141577	1	BAR, tie
14	9974976617	1	SPRING, TENSION, B 2, 8 x 25 x 40 Aa
15	060142682	1	PROTECTION PLATE,
16	006340781	25	SCREW, hex, M 8 x 16 -8.8
18	006347007	8	SCREW, hex, M 12 x 45 -8.8
19	006346666	8	SCREW, hex, M 12 x 30 -8.8
20	9934959141	4	SCREW, hex, M 16 x 1,5 x 30 -8.8
21	006213830	6	NUT, hex, M 8 -8
22	006214140	14	NUT, hex, M 12 -8
23	003794674	8	SCREW, cheese-head, M 12 x 25 -8.8
25	9999853133	4	PLATE, LOCKING, washer, VSF M 16
26	9999853125	29	PLATE, LOCKING, washer, VSF M 12
27	9961920061	24	WASHER, SPRING, B 8
28	9964962783	24	WASHER, B 8.4
29	003794682	4	PLATE, LOCKING, washer, VSF Z 12
31	060145402	1	RETAINER, arm
32	006347152	4	SCREW, hex, M 12 x 50 -8.8
33	061029840	1	HOOK, capstan

211 SEPARATOR DRUM DRIVE

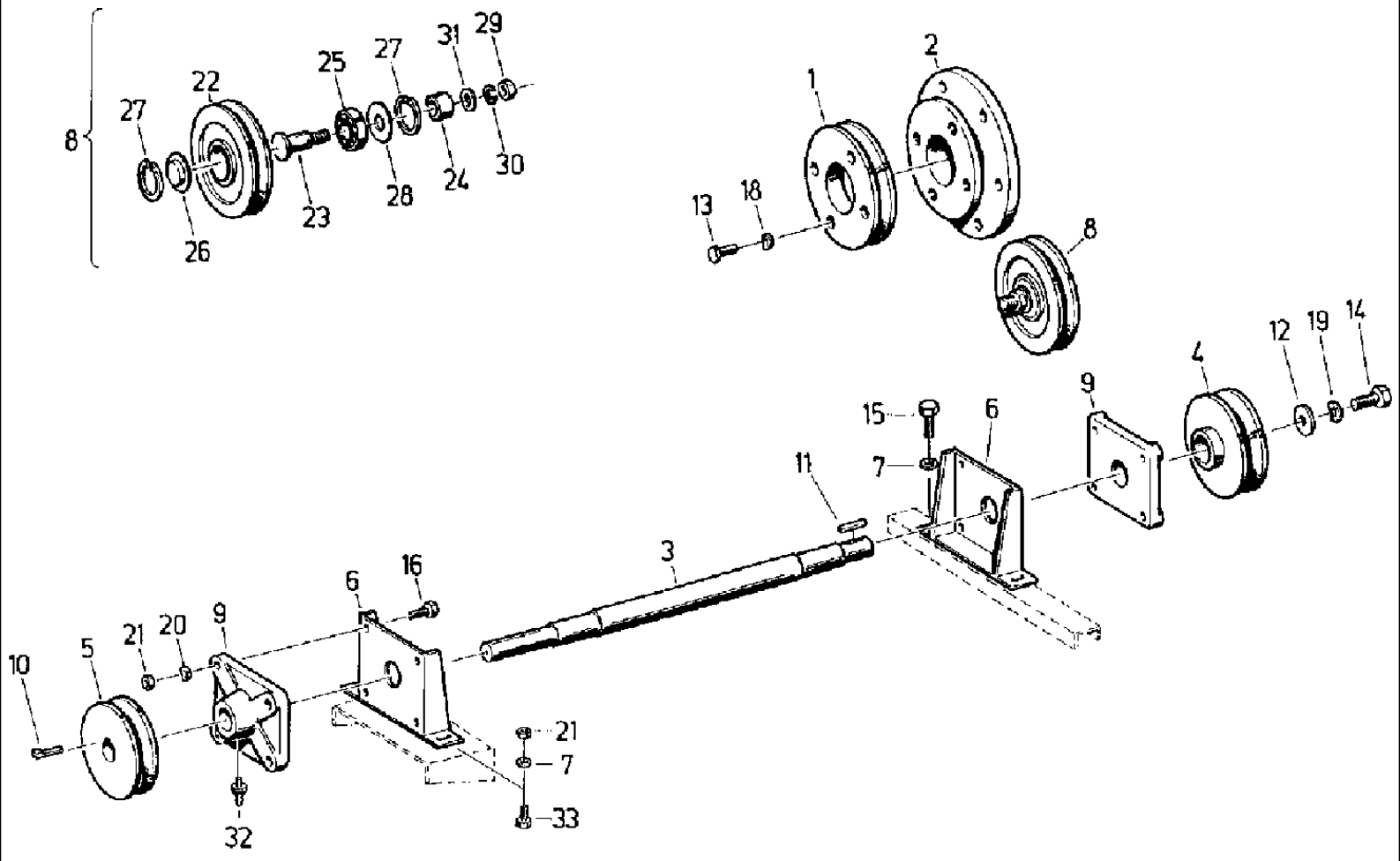

527 CASE IH COMBINE (1/98-12/98)

211 SEPARATOR DRUM DRIVE

Ref	Part Number	Qty	Description
1	061027718	1	GROOVED PULLEY, vee-belt
2	061024370	1	ADAPTER, PIECE intermediate
3	061024401	1	SHAFT,
4	060180550	1	WASHER,
5	060180575	1	WASHER,
6	4260700997	2	BEARING, bracket
7	9999853094	4	PLATE, LOCKING, washer, VSF M10
8	4270722277	1	TIGHTENER SHEAVE, PULLEY idler
9	9902888270	2	CARRIER, BEARING, flange, FGE 205
10	9965955252	1	KEY, gib-head, 6 x 6 x 32
11	9965955910	1	KEY, BUCKET TOOTHRT, fitting, A 6 x 6 x 20
12	9965964928	1	WASHER, 9 x 32 x 4
13	006338883	4	SCREW, hex, M 6 x 16 -8.8
14	9933930001	1	SCREW, hex, M 8x20 -8.8
15	9933929065	2	SCREW, hex, M 10 x 20 -8.8
16	9933931123	8	SCREW, hex, M 10 x 30 -8.8
18	9961919927	4	WASHER, SPRING, B 6
19	9961920061	1	WASHER, SPRING, B 8
20	9961920004	8	WASHER, SPRING, B 10
21	006213935	10	NUT, hex, M 10 -8
22	4270721348	1	ROLLER, SHIFTER, pulley
23	9949865572	1	PIN, LARGE, bolt, 65
24	4250125220	1	BUSHING,
25	9902890642	1	BEARING, ball, 6204 RS
26	9904868931	1	COVER, 47
27	9964917770	2	CIRCLIP, 47 x 1.6
28	4110085640	1	SEAL WASHER,
29	006214140	1	NUT, hex, M 12 -8
30	9961911204	1	WASHER, LOCK, spring, B 12
31	9960922031	1	WASHER, 14
32	003617056	2	NIPPLE, LUBE, AM 8 x 1
33	006344037	2	SCREW, hex, M 10 x 25 -8.8

212 ENGINE COWLING

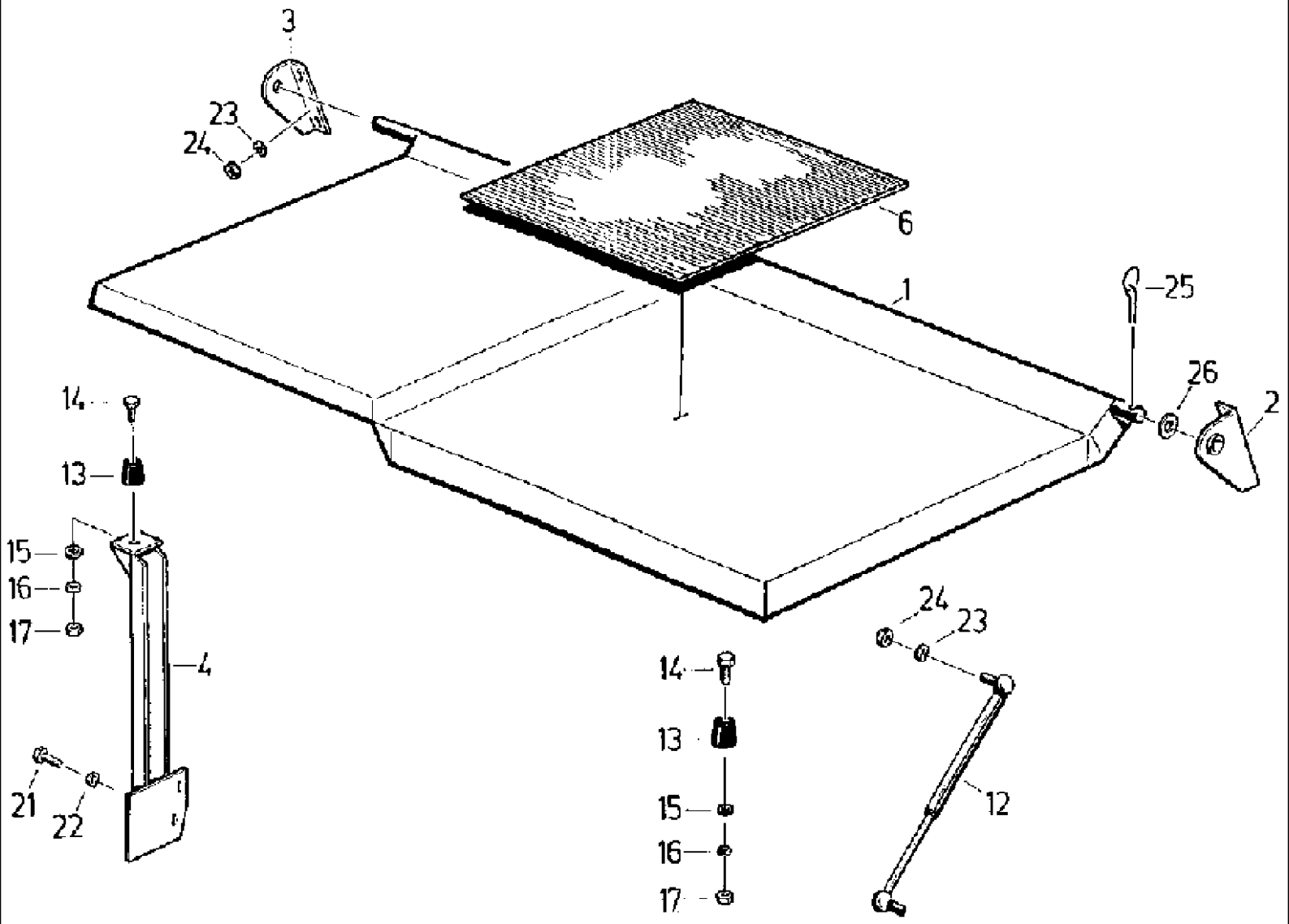

527 CASE IH COMBINE (1/98-12/98)

212 ENGINE COWLING

Ref	Part Number	Qty	Description
1	061025201	1	COVER, PROTECTIVE,
2	061020607	1	SHIN, strap, g
3	061020615	1	SHIN, strap, f
4	061025025	1	SUPPORT, trestle
6	4240028094	1	MAT, rubber
12	060504763	1	CYLINDER, GAS, spring
13	9972879345	3	BUFFER, RUBBER, foot, 28
14	9938927766	3	SCREW, fillister-head, M 6 x 35 -5.8
15	006510927	3	WASHER, A 6.4
16	9961919927	3	WASHER, SPRING, B 6
17	006213734	6	NUT, hex, M 6 -8
21	006346408	2	SCREW, hex, M 12 x 20 -8.8
22	006501557	2	WASHER, SPRING, B12
23	9961920061	6	WASHER, SPRING, B 8
24	006213830	6	NUT, hex, M 8 -8
25	060504771	1	PIN, LINCH, PLUG folding, 6 x 42
26	9960922876	1	WASHER, 26

213 ELECTRICAL EQUIPMENT ENGINE

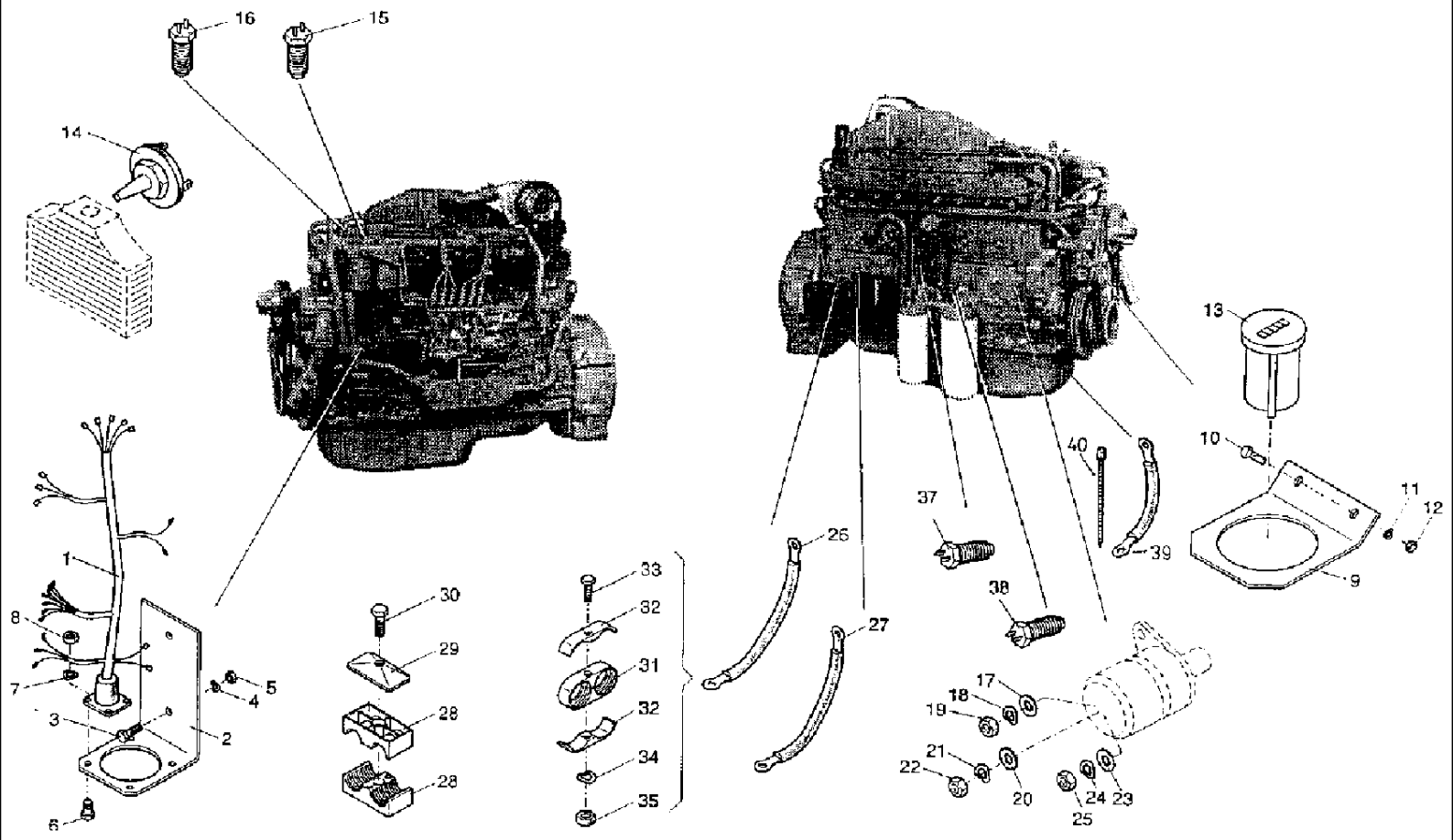

527 CASE IH COMBINE (1/98-12/98)

213 ELECTRICAL EQUIPMENT ENGINE

Ref	Part Number	Qty	Description
1	061069011	1	HARNESS, cable, ab 527- 0322
2	061033033	1	RETAINER, pin, X5,1
3	9933929200	2	SCREW, hex, M 6 x 12 -8.8
4	9961919927	2	WASHER, SPRING, B 6
5	006213734	2	NUT, hex, M 6 -8
6	9936938578	4	SCREW, cheese-head, M 4 x 16 -5.8
7	9961919896	4	WASHER, SPRING, B 4
8	9950895496	4	NUT, hex, M 4 -8
9	061025195	1	BRACKET, holder-engine hour counter
10	9933929200	2	SCREW, hex, M 6 x 12 -8.8
11	9961919927	2	WASHER, SPRING, B 6
12	006213734	2	NUT, hex, M 6 -8
13	003785167	1	HOURMETER, engine
14	060503297	1	SENSOR, cooling water level
15	060514162	1	SENDOR, TEMPERATURE, probe
16	060514170	1	CONTACT, temperature switch
17	9960921633	1	WASHER, A 8.4
18	9961920061	1	WASHER, SPRING, B 8
19	006213830	1	NUT, hex, M 8 -8
20	9960921457	1	WASHER, A 4.3
21	9961919896	1	WASHER, SPRING, B 4
22	9950895496	1	NUT, hex, M 4 -8
23	006510927	1	WASHER, A 6.4
24	9961919927	1	WASHER, SPRING, B 6
25	006213734	1	NUT, hex, M 6 -8
26	4254126724	1	CABLE, LEAD ground
27	9922875301	1	SHIN, LINE connection
28	060505418	2	CIRCLIP, 214/14 PP
29	006646242	1	COVER, plate, GD 2 D
30	060505426	1	SCREW, hex, AS-2D
31	060504788	1	CLAMP, double, LNG3 14/14 PP
32	060505387	2	COVER, plate, DPL 3
33	006341485	1	SCREW, hex, M 8 x 35 -8.8
34	9961920061	1	WASHER, SPRING, B 8
35	006213830	1	NUT, hex, M 8 -8
37	060516027	1	TRANSMITTER, PROBE oil pressure
38	060516035	1	CONTACT ELECTRO/HYD, SWITCH oil pressure
39	061052606	1	CABLE, LEAD ground
40	060152467	3	CABLE, tie

214 SEPARATING DRUM

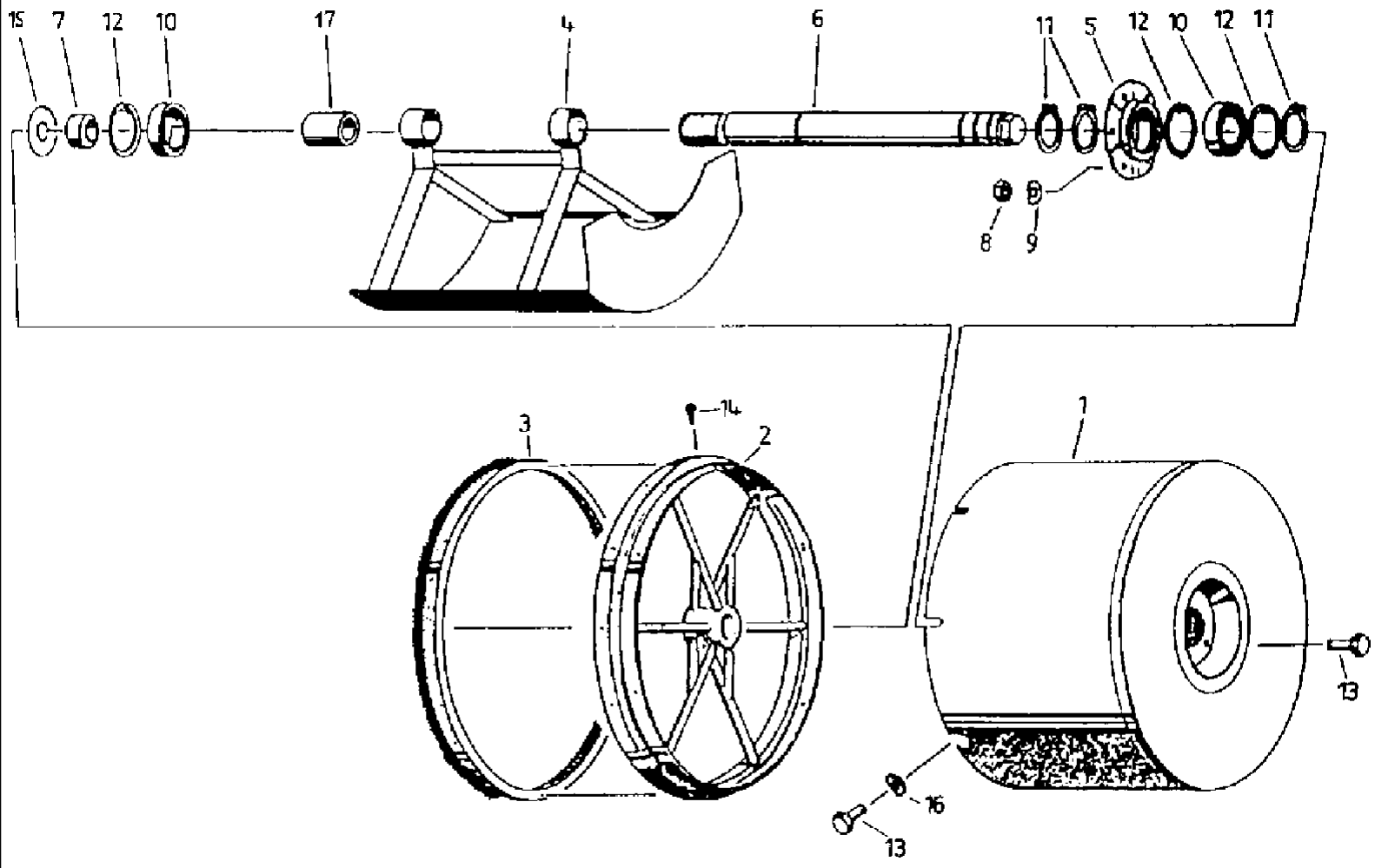

527 CASE IH COMBINE (1/98-12/98)

214 SEPARATING DRUM

Ref	Part Number	Qty	Description
1	4270718586	1	DRUM,
2	4260712742	1	SHAFT, DRIVE, ring
3	4260712750	1	BRUSH, sealing
4	4270718594	1	COVER, PROTECTIVE, drum
5	4260701040	1	HOUSING, BEARING,
6	4270718600	1	AXLE,
7	4260701065	1	PAD, WEAR, PIECE pressure
8	006213734	3	NUT, hex, M 6 -8
9	9961919927	3	WASHER, SPRING, B 6
10	9902892837	2	BEARING, ball, 6005-2RS
11	9964917192	3	CIRCLIP, 25 x 1.2
12	9964917770	3	CIRCLIP, 47 x 1.6
13	9933929200	9	SCREW, hex, M 6 x 12 -8.8
14	9937984092	5	SCREW, sheet metal, B 2.9 x 9.5
15	9965920611		SHIM, precision, n.B., 25 x 35 x 1
16	006510228	6	WASHER, B 6.4
17	060168788	1	LANDSIDE, feed